EMR MODEL 4140
PROGRAMMABLE TUNABLE DISCRIMINATOR
(SERIAL NOS. 101 AND UP)
(REVISION A)

INSTRUCTION MANUAL

MP MASTER
MA29953

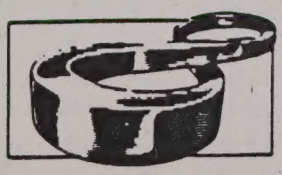

FAIRCHILD WESTON SYSTEMS INC.
Schlumberger
Excellence in Defense Systems Technology...Worldwide

DATA SYSTEMS DIVISION
P.O. Box 3041, Sarasota, Florida 33578
(813) 371-0811 • Telex 052-890 • TWX 810-864-0406

EMR MODEL 4140

LIST OF EFFECTIVE PAGES

Dates of issue for the different versions are:

Basic ..... July, 1967
Revision A ..... August, 1969

Total number of pages in this manual is 173 consisting of the following:

Page No.	Rev. Letter	Page No.	Rev. Letter
*Title	A	*5-35 thru 5-37	A
i	Basic	5-38	Basic
*ii	A	*5-39	A
iii and iv	Basic	5-40	Basic
*v and vi	A	*5-41 thru 5-43	A
vii	Basic	5-44	Basic
*1-1 and 1-2	A	*5-45	A
1-3 thru 1-6	Basic	5-46 thru 5-48	Basic
*1-7 and 1-8	A	*5-49	A
*2-1	A	5-50	Basic
2-2	Basic	*5-51 thru 5-53	A
*2-3 and 2-4	A	5-54	Basic
3-1 and 3-2	Basic	*5-55	A
*3-3	A	5-56	Basic
3-4 thru 3-14	Basic	*5-57	A
*3-15	A	5-58	Basic
3-16 thru 3-18	Basic	*5-59	A
4-1 thru 4-4	Basic	5-60 and 5-61	Basic
*4-5	A	*5-62	A
4-6 thru 4-18	Basic	6-1	Basic
*5-1	A	*6-2 thru 6-55	A
5-2 thru 5-34	Basic		

* The asterisk indicates pages that changed in the current revision.

Digitized by the Internet Archive
in 2025

https://archive.org/details/manualsplus_07771

TABLE OF CONTENTS

SECTION			PAGE
1	GENERAL DESCRIPTION		1-1
	1.1	Introduction	1-1
	1.2	Functional Description	1-2
	1.3	Physical Description	1-3
2	SPECIFICATIONS		2-1
	2.1	General	2-1
	2.2	Electrical Specifications	2-1
	2.3	Mechanical Specifications	2-3
3	INSTALLATION AND OPERATION		3-1
	3.1	Installation	3-1
	3.2	Operation	3-1
		3.2.1 Local Mode of Operation	3-1
		3.2.1.1 Initial Adjustments	3-1
		3.2.1.2 Operating Procedure	3-10
		3.2.2 Remote Mode of Operation	3-11
		3.2.3 Tape-Speed-Compensation (TSC) System	3-15
		3.2.4 Tape-Speed-Compensation (TSC) Gain and Delay Adjustment	3-16
4	THEORY OF OPERATION		4-1
	4.1	General	4-1
	4.2	General Theory of Operation	4-1
	4.3	Detailed Theory of Operation	4-4
		4.3.1 Bandpass Input Filter (BPIF)	4-4
		4.3.2 Limiter	4-6
		4.3.3 Subcarrier Amplitude Meter Circuit	4-6
		4.3.4 Zero-Signal Detector Circuit	4-6
		4.3.5 Trigger Circuit	4-7
		4.3.6 FM Detector	4-8
		4.3.7 Summing Multivibrator	4-9
		4.3.8 Voltage Switch	4-10
		4.3.9 Out-of-Range Detector	4-10
		4.3.10 Low-Pass Output Filter	4-11
		4.3.11 Output Circuits	4-13
		4.3.12 Balance Circuits	4-13
		4.3.13 Tape-Speed-Compensation Circuit (TSC)	4-14
		4.3.14 Power Supply and Regulator Circuits	4-14

TABLE OF CONTENTS (CONT'D.)

SECTION			PAGE
	4.3.14.1	-20-Volt Regulator Circuit	4-15
	4.3.14.2	- LIMIT Circuit	4-17
5	MAINTENANCE		5-1
	5.1	General	5-1
	5.2	Troubleshooting	5-1
	5.2.1	Visual Inspection	5-1
	5.2.2	Circuit Waveforms	5-2
	5.2.3	Transistor Voltage Measurements	5-2
	5.3	Checkout and Adjustment	5-2
	5.3.1	Test Equipment Required	5-3
	5.3.2	Regulator Circuits	5-3
	5.3.3	Bandpass Input Filter	5-5
	5.3.4	Limiter and Trigger Circuit	5-5
	5.3.5	Subcarrier Amplitude Meter Circuit	5-6
	5.3.6	Zero-Signal Detector	5-6
	5.3.7	Detector Circuit	5-6
	5.3.8	Voltage Switch Circuit	5-7
	5.3.9	Out-of-Range Detector	5-7
	5.3.10	Low-Pass Output Filter	5-8
	5.3.11	Output Circuits	5-8
	5.3.12	Tape-Speed-Compensation (TSC) Circuit	5-10
	5.4	Wiring	5-10
6	PARTS LISTS		6-1
	6.1	General	6-1

LIST OF ILLUSTRATIONS

FIGURE		PAGE
Frontispiece	EMR Model 4140 Programmable Tunable Discriminator	vii
1-1	EMR Model 4140 Programmable Tunable Discriminator, Major Assemblies	1-5
1-2	Card-Tray Assembly A2, Printed-Circuit-Card Complement	1-6
3-1	Model 4140 Programmable Tunable Discriminator, Rear-Panel Configuration	3-2
3-2	Model 4140 Programmable Tunable Discriminator, Location of Front-Panel Controls, Indicators, and Monitor Jacks	3-4
3-3	Remote Control Connector A3J5, Pin-Location Diagram	3-11
3-4	Tape-Speed-Compensation System, Block Diagram	3-15
3-5	TSC Gain Adjustment, Equipment Setup	3-17
3-6	VCO Calibration for TSC Delay Adjustment, Equipment Setup	3-18
3-7	TSC Delay Adjustment, Equipment Setup	3-18
4-1	Simplified Block Diagram, Model 4140 Programmable Tunable Discriminator	4-2
4-2	Detailed Block Diagram	4-5
4-3	Simplified Schematic Diagram, Subcarrier Amplitude Meter Circuit	4-7
4-4	Simplified Schematic Diagram, Zero-Signal Detector Circuit	4-8
4-5	Simplified Schematic Diagram, FM Detector Section 1	4-9
4-6	Voltage Switch Circuit, Simplified Schematic Diagram	4-11
4-7	Positive Out-of-Range Detector, Simplified Schematic Diagram	4-12
4-8	Power Supply and Regulator Circuits, Simplified Schematic	4-16
4-9	-20-Volt Regulator Circuit, Schematic Diagram	4-18
5-1	Model 4140 Programmable Tunable Discriminator, Assembly Diagram	5-31
5-2	Front-Panel Assembly A1, Location of Components	5-32
5-3	Front-Panel Assembly A1, Schematic Diagram	5-33
5-4	BPIF No. 1 Printed-Circuit Card A2J1, Location of Components	5-34
5-5	BPIF No. 1 Printed-Circuit Card A2J1, Schematic Diagram	5-35
5-6	Input Printed-Circuit Card A2J2, Location of Components	5-36
5-7	Input Printed-Circuit Card A2J2, Schematic Diagram	5-37
5-8	BPIF No. 2 Printed-Circuit Card A2J3, Location of Components	5-38
5-9	BPIF No. 2 Printed-Circuit Card A2J3, Schematic Diagram	5-39
5-10	TSC Printed-Circuit Card A2J4, Location of Components	5-40

LIST OF ILLUSTRATIONS (CONT'D.)

FIGURE		PAGE
5-11	TSC Printed-Circuit Card A2J4, Schematic Diagram	5-41
5-12	Limiter Printed-Circuit Card A2J6, Location of Components	5-42
5-13	Limiter Printed-Circuit Card A2J6, Schematic Diagram	5-43
5-14	Detector Printed-Circuit Card A2J8, Location of Components	5-44
5-15	Detector Printed-Circuit Card A2J8, Schematic Diagram	5-45
5-16	Voltage Switch Printed-Circuit Card A2J10, Location of Components	5-46
5-17	Voltage Switch Printed-Circuit Card A2J10, Schematic Diagram	5-47
5-18	LPOF Single-Pole Printed-Circuit Card A2J11, Location of Components	5-48
5-19	LPOF Single-Pole Printed-Circuit Card, Schematic Diagram	5-49
5-20	LPOF Pole-Pair Printed-Circuit Card A2J12, Location of Components	5-50
5-21	LPOF Pole-Pair Printed-Circuit Card A2J12, Schematic Diagram	5-51
5-22	LPOF Pole-Pair Printed-Circuit Card A2J13, Location of Components	5-52
5-23	LPOF Pole-Pair Printed-Circuit Card A2J13, Schematic Diagram	5-53
5-24	LPOF Pole-Pair Printed-Circuit Card A2J14, Location of Components	5-54
5-25	LPOF Pole-Pair Printed-Circuit Card A2J14, Schematic Diagram	5-55
5-26	Output Printed-Circuit Card A2J15, Location of Components	5-56
5-27	Output Printed-Circuit Card A2J15, Schematic Diagram	5-57
5-28	Regulator Printed-Circuit Card A2J16, Location of Components	5-58
5-29	Regulator Printed-Circuit Card A2J16, Schematic Diagram.	5-59
5-30	Power Supply Assembly, A4	5-60
5-31	Component Mounting Board A4TB1, Location of Components	5-61
5-32	Power Supply Assembly, A4, Schematic Diagram	5-62

LIST OF TABLES

TABLE NO.		PAGE
1-1	Card-Tray Assembly A2, Printed-Circuit-Card Description	1-7
2-1	EMR 4140 Model Number Identification	2-4
3-1	Model 4140 Programmable Tunable Discriminator, Function of Rear-Panel Connectors	3-3
3-2	Model 4140 Programmable Tunable Discriminator, Function of Front-Panel Controls, Indicators, and Monitor Jacks	3-5
3-3	Remote Control Programming Instructions	3-12
5-1	Circuit Waveforms, Model 4140 Programmable Tunable Discriminator	5-11
5-2	Transistor Voltages, BPIF No. 1 Printed-Circuit Card (A2J1)	5-15
5-3	Transistor Voltages, Input Printed-Circuit Card (A2J2)	5-16
5-4	Transistor Voltages, BPIF No. 2 Printed-Circuit Card (A2J3)	5-17
5-5	Transistor Voltages, TSC Printed-Circuit Card (A2J4)	5-18
5-6	Transistor Voltages, Limiter Printed-Circuit Card (A2J6)	5-19
5-7	Transistor Voltages, Detector Printed-Circuit Card (A2J8)	5-20
5-8	Transistor Voltages, Voltage Switch Printed-Circuit Card (A2J10)	5-21
5-9	Transistor Voltages, LPOF Single-Pole Printed-Circuit Card (A2J11)	5-22
5-10	Transistor Voltages, LPOF Pole-Pair Printed-Circuit Card (A2J12, J13, and J14)	5-23
5-11	Transistor Voltages, Output Printed-Circuit Card (A2J15)	5-24
5-12	Transistor Voltages, Regulator Printed-Circuit Card (A2J16)	5-25
5-13	Connection List, Model 4140 Programmable Tunable Discriminator	5-26
6-1	Model 4140 Programmable Tunable Discriminator Assembly	6-2
6-2	Front-Panel/Subpanel Assembly, Parts List	6-3
6-3	Card Tray Assembly, Parts List	6-4
6-4	Bandpass Input Filter No. 1 Printed-Circuit Card, Parts List	6-5
6-4A	Model 4140-M5 Bandpass Input Filter Card No. 1 Modification Parts List	6-8
6-5	Input Printed-Circuit Card, Parts List	6-9
6-5A	Model 4140-M5 Input Card Modification Parts List	6-13

LIST OF TABLES (CONT'D.)

TABLE NO.		PAGE
6-6	Bandpass Input Filter No. 2 Printed-Circuit Card, Parts List	6-14
6-6A	Model 4140-M5 Bandpass Input Filter No. 2 Card Modification Parts List	6-17
6-7	Tape-Speed-Compensation Printed-Circuit Card, Parts List	6-18
6-8	Limiter Printed-Circuit Card, Parts List	6-21
6-9	Detector Printed-Circuit Card, Parts List	6-24
6-10	Voltage Switch Printed-Circuit Card, Parts List	6-26
6-10A	Model 4140-M5 Voltage Switch Card Modification Parts List	6-29
6-11	Low-Pass Output Filter Single-Pole Printed-Circuit Card, Parts List	6-30
6-12	Low-Pass Output Filter Pole-Pair Printed-Circuit Card, Parts List	6-34
6-13	Low-Pass Output Filter Pole-Pair Printed-Circuit Card, Parts List	6-39
6-14	Low-Pass Output Filter Pole-Pair Printed-Circuit Card, Parts List	6-43
6-15	Output Printed-Circuit Card, Parts List	6-45
6-15A	Model 4140-M5 Output Card Modification Parts List	6-48
6-16	Regulator Printed-Circuit Card, Parts List	6-49
6-17	Rear-Panel Assembly, Parts List	6-51
6-18	Power Supply Assembly, Parts List	6-52
6-19	Approved Vendors List	6-53

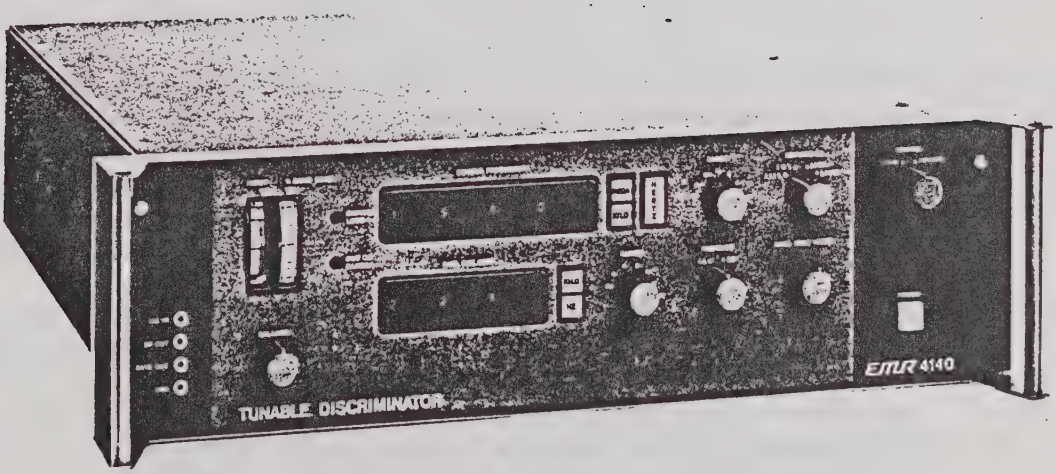

EMR MODEL 4140 TUNABLE SUBCARRIER DISCRIMINATOR

SECTION 1

GENERAL DESCRIPTION

1.1 INTRODUCTION

This manual contains information for the operation and maintenance of the EMR Model 4140 Programmable Tunable Discriminator. The discriminator is a precision solid-state instrument intended for rack mounting in an FM data-processing or -checkout complex. The discriminator is designed to process analog or pulse-type intelligence data contained in an FM subcarrier channel. Operating FM subcarrier center frequencies, deviations, and data-cutoff frequencies are manually programmable at the front panel or remotely programmable from an external source.

An EMR Model 4141 Programmer is a companion unit available to remotely program the discriminator. The programmer is capable of selecting a total of 23 discriminator programs, each program selecting the operating parameters corresponding to an IRIG channel. When an EMR Model 4141 Programmer is purchased with the discriminator, a description of the programmer is provided in a separate instruction manual.

FM subcarrier center frequencies between 100 Hz and 1.5 MHz are selectable to four significant digits. Standard center-frequency deviations of ±7.5%, ±15%, ±30%, and ±40% are provided; however, other deviations between these limits are available on special request. Tunable output filters provide either constant-delay or constant-amplitude characteristics with data-cutoff frequencies between 1 Hz and 300 KHz.

The discriminator is available in any of six standard design-sequence variations. These are described as follows:

a. Model 4140-X1* -- Standard unit containing a three-pole low-pass output filter for a rolloff of 18 Db/octave beyond selected cutoff frequency. Tape-speed compensation (TSC) is not included.

b. Model 4140-X2* -- Same as Model 4140-X1, except TSC is included.

c. Model 4140-X3* -- Standard unit containing a five-pole low-pass output filter for a rolloff of 30 Db/octave beyond selected cutoff frequency. TSC is not included.

d. Model 4140-X4* -- Same as Model 4140-X3, except TSC is included.

* This digit identifies the operating power, see Section 2.

e. Model 4140-X5* -- Standard unit containing a seven-pole low-pass output filter for a rolloff of 42 Db/octave beyond selected cutoff frequency. TSC is not included.

f. Model 4140-X6* -- Same as Model 4140-X5 except TSC is included.

1.2 FUNCTIONAL DESCRIPTION

This discriminator extracts a subcarrier channel from an FM multiplex and detects the intelligence data contained in that channel. This intelligence data is presented at the discriminator output in the form of varying analog voltages.

A tunable bandpass input filter (BPIF) at the discriminator input extracts the desired subcarrier frequency from the input FM multiplex, all other subcarrier frequencies are attenuated. The single-channel BPIF output is amplitude limited and pulse shaped by a three-stage high-gain limiter circuit and trigger circuit.

The FM detector is a dual-channel circuit employing full-wave pulse-averaging FM detection for determining the amount and direction of the subcarrier modulation. This modulation results in a change in the duty cycle of the detector square-wave outputs. The dual-channel detector outputs are summed by a high-speed bistable multivibrator producing a square-wave output with a duty cycle proportional to the subcarrier modulation. A voltage switch at the summing-circuit output produces a similar square-wave output but with precise positive and negative excursions to eliminate erroneous data contained in an amplitude-modulated signal.

The modulation component is filtered by a tunable three-, five-, or seven-pole low-pass output filter with a selectable constant-delay or constant-amplitude characteristic. An output amplifier at the discriminator output provides drive capability for the signal output to recording or readout devices.

The discriminator is operated in a local mode or remote mode. In the local mode, front-panel controls select all operating parameters for the subcarrier channels. These controls include center-frequency selection, deviation selection, discriminator balance, data-cutoff frequency, output-filter response, and bandedge-voltage selection. In the remote mode, the operating parameters for subcarrier channels are selected by an external source such as computer, remote control panel, or an EMR Model 4141 Programmer.

An internal power supply operates from a primary power input to generate all voltages for discriminator operation.

* This digit identifies the operating power, see Section 2.

1.3 PHYSICAL DESCRIPTION

The EMR Model 4140 Programmable Tunable Discriminator is a self-contained unit, 20-1/4 inches in overall depth, designed for mounting in a standard 19-inch equipment rack. The discriminator is 5-1/4 inches high and 19 inches wide, including the mounting slides. Tilting or nontilting side-mounting slides are provided for mounting the discriminator in the equipment rack.

The discriminator consists of four major assemblies as shown in Figure 1-1. These assemblies are identified by assembly designations A1 through A4 as follows:

A1--Front panel/subpanel

A2--Card tray

A3--Rear panel

A4--Power supply

The front panel/subpanel, A1, is a two-segment assembly in which all operating controls, indicators, and monitor jacks are mounted directly to the subpanel and extend through precut openings in the front panel. Also, the front panel/-subpanel contains turn-to-lock catches used to secure the discriminator in the mounting rack.

The card-tray assembly, A2, mounts all plug-in printed-circuit cards in the discriminator chassis. Access to this assembly is obtained by releasing the quick-disconnect fasteners in the top cover of the discriminator and removing the cover. Cam-operated ejectors on both ends of the printed-circuit cards facilitate their removal from the card-tray locations. Provisions for up to 14 printed-circuit cards are provided; however, the number of cards will vary depending on the particular discriminator configuration. The maximum card-tray printed-circuit-card complement is shown in Figure 1-2 and described in Table 1-1. All wiring to the printed-circuit cards in the card tray is terminated at a 32-pin card mating receptacle in the bottom of each card location.

The rear-panel assembly, A3, contains electrical connectors for all input and output connections to the discriminator. A twist-lock power plug is provided for AC power input to the discriminator power supply. A rear-panel five-ampere fuse, connected in series with the AC power input, provides protection from the AC power source. Internal cooling is provided by a blower mounted vertically on the inside of the rear panel. The blower draws cooling air in through a screen on the opposite side of the rear panel and discharges the air through the blower opening.

The power-supply assembly, A4, provides all DC voltages necessary for discriminator operation. The power supply is located adjacent to the card-tray

assembly in the middle section of the discriminator. Access to the power supply is gained by releasing the quick-disconnect fasteners in the discriminator top cover and removing the top cover. AC power wiring to the power supply is routed from the twist-lock power plug on the rear panel through a rear-panel fuse and front-panel power switch to the power-supply power components.

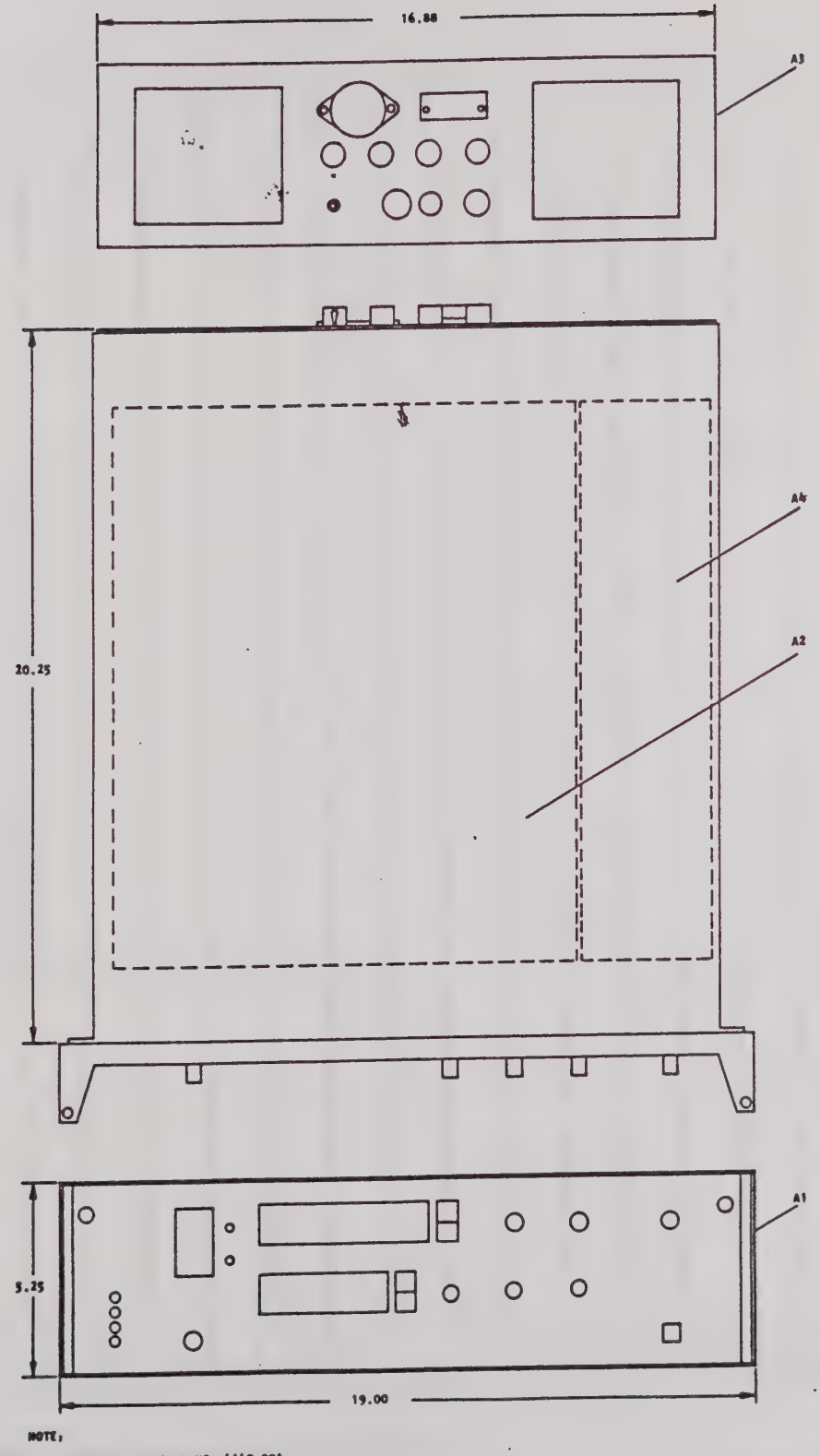

Figure 1-1. EMR Model 4140 Programmable Tunable Discriminator, Major Assemblies

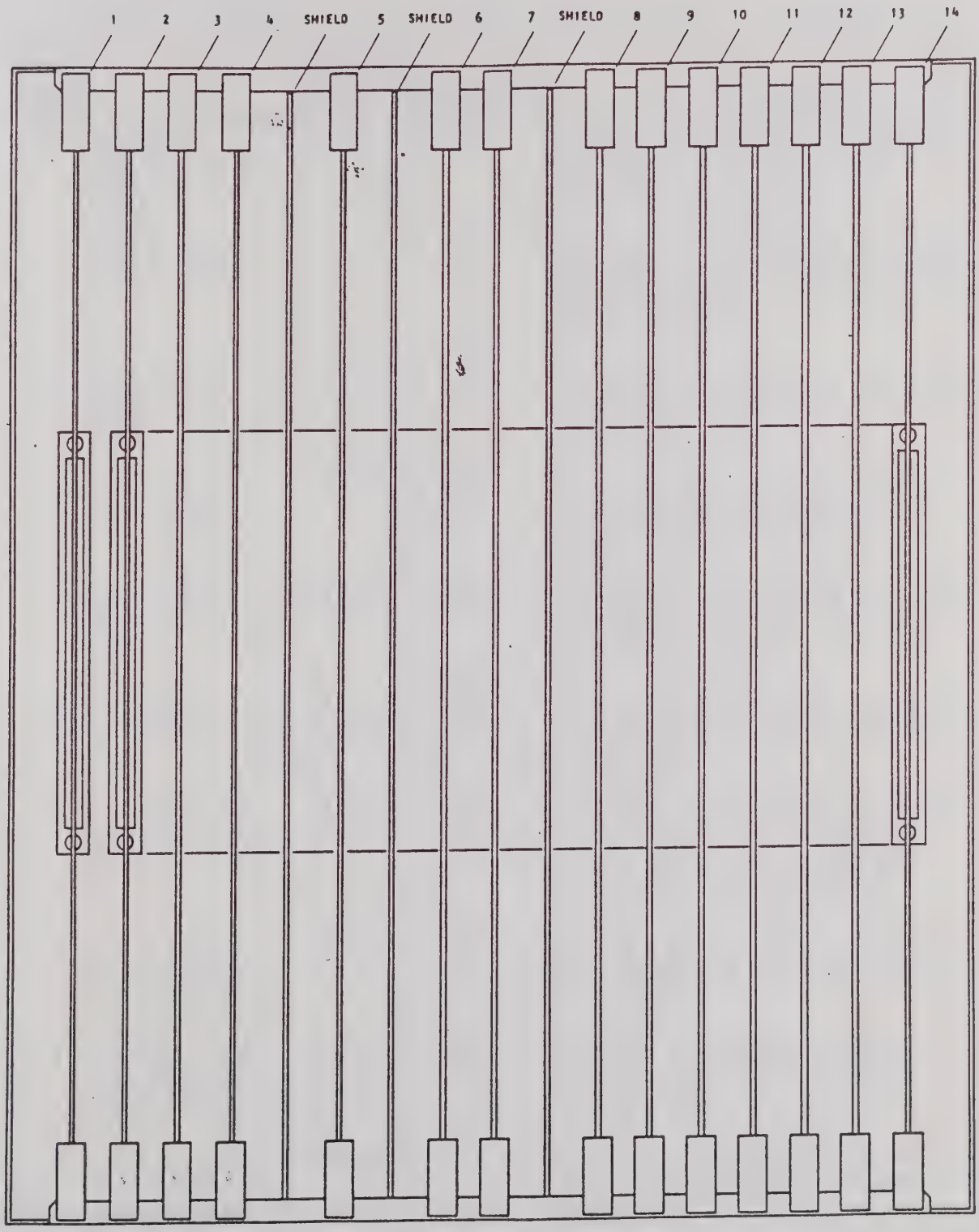

NOTE:

1. EMR Drawing Control No. 4140-002.

Figure 1-2. Card-Tray Assembly A2, Printed-Circuit Card Complement

Table 1-1. Card-Tray Assembly A2, Printed-Circuit-Card Description

REF. NO.	NAME	DESIG-NATION	TYPE	FUNCTION
1	BPIF No. 1 Printed-Circuit Card	A2J1	6463	Contains components for the first section of the tunable bandpass input filter.
2	Input Printed-Circuit Card	A2J2	6472	Contains components for the input-amplifier circuit, isolation amplifiers, and subcarrier amplitude meter circuit.
3	BPIF No. 2 Printed-Circuit Card	A2J3	6466	Contains components for the second section of the tunable bandpass input filter circuit.
4	TSC* Printed-Circuit Card	A2J4	6469	Contains components for the tape-speed-compensation circuit and detector balance circuit.
5	Limiter* Printed-Circuit Card	A2J6	6445	Contains components for the limiter circuit, trigger circuit, and zero-signal circuit.
6	Detector* Printed-Circuit Card	A2J8	6448	Contains components for the dual-channel pulse-averaging FM detector circuit.
7	Voltage Switch Printed-Circuit Card	A2J10	6451	Contains components for the summing multivibrator circuit, the voltage switch circuit, and the out-of-range detector circuit.
8	LPOF Single-Pole Printed-Circuit Card	A2J11	6457	Contains components for the tunable single-pole low-pass output-filter circuit.
9	LPOF** Pole-Pair Printed-Circuit Card	A2J12	7525	Contains components for the tunable pole-pair low-pass output filter circuit.
10	LPOF** Pole-Pair Printed-Circuit Card	A2J13	7526	Contains components for the tunable pole-pair low-pass output filter circuit.
11	LPOF Pole-Pair Printed-Circuit Card	A2J14	7527	Contains components for the tunable pole-pair low-pass output filter circuit.

Table 1-1 (Cont'd.). Card-Tray Assembly A2, Printed-Circuit-Card Description

REF. NO.	NAME	DESIG-NATION	TYPE	FUNCTION
12	Output Printed-Circuit Card	A2J15	6460	Contains components for the output amplifier circuit.
13	Regulator Printed-Circuit Card	A2J16	6475	Contains components for the power supply regulator circuits.
14	Extender*** Printed-Circuit Card	A2J17	7753	

NOTES:

* These cards are factory matched sets and must be used together. Do not replace or exchange any of these cards without including the entire set. If factory repairs are necessary, return all three cards.

** These cards are used in particular discriminator configurations as follows:

A2J12--Models 4140-05 and 4140-06 only.
A2J13--Models 4140-03, 4140-04, 4140-05, and 4140-06 only.

*** Extender card is optional.

SECTION 2

SPECIFICATIONS

2.1 GENERAL

This section contains the electrical and mechanical specifications for the EMR Model 4140 Programmable Tunable Discriminator.

2.2 ELECTRICAL SPECIFICATIONS

a. Subcarrier Center Frequencies: Center frequencies between 100 Hz and 1.5 MHz are selectable up to four significant digits by front-panel digit switches and range switch.

b. Deviations: Deviations of ±7.5%, ±15%, ±30%, and ±40% are standard. These are selectable by front-panel switching.

c. Data-Cutoff Frequencies: Cutoff frequencies between 1 Hz and 300 KHz are selectable to three significant digits by front-panel digit switches and range switch.

d. Input Impedance: Greater than 100K ohms resistive shunted by less than 30 Pf capacitance.

e. Dynamic Input Signal Range: 10 millivolts to 5 volts RMS for subcarrier center frequencies up to 300 KHz. Minimum input signal increases linearly to 50 millivolts RMS for frequencies from 300 KHz to 1.5 MHz. All measurements are made with respect to the output of the bandpass input filter.

f. Rejection of Unwanted Signals: Full-scale modulation of an adjacent ±7.5% deviation IRIG channel causes an RMS error of less than 0.1% of bandwidth even when interfering signal is of an amplitude equal to the desired subcarrier input signal.

g. Amplitude Modulation Rejection: With a deviation ratio of 5, a 20-Db step of input amplitude anywhere in the dynamic input range causes a peak transient of less than 1% of bandwidth.

h. Static Linearity: A center frequencies of up to 1 MHz, ±0.1% of bandwidth, best straight line, for deviations of ±7.5% and ±15%; and ±0.2% of bandwidth, best straight line, for deviations greater than ±15%. At center frequencies of 1 MHz or more, ±1% of bandwidth, best straight line, for all deviations.

i. Output Voltage: Single ended and referenced to ground. The deviation sense is selectable by rear-panel switching. Front-panel control provides means for varying output voltage at bandedge from 0 to ±10 volts. Output voltage is limited to approximately ±13 volts.

j. Output Current: 200 milliamperes from DC to 50 KHz; 100 milliamperes from 50 KHz to 100 KHz; 50 milliamperes above 100 KHz. Output current is limited to ±225 milliamperes.

k. RMS Output Noise: For deviation ratios of 5 or greater, the output noise will be less than 0.1% of bandwidth at center frequencies up to 300 KHz; less than 0.2% of bandwidth above 300 KHz.

l. Output Zero Stability: ±0.15% of full bandwidth in a 15-hour period at a constant temperature after a 30-minute warm-up.

m. Output Impedance: Less than 2 ohms to 10 KHz; increasing linearly to a maximum of less than 10 ohms at 300 KHz.

n. Output Loading: Maximum allowable capacitive load is 0.01 µf directly at the output connector. If the output current capability is not exceeded, the discriminator will operate with any load capacitance connected in series with a resistance of 10 ohms or more. The discriminator cannot be damaged by an output short circuit.

o. Harmonic Distortion: For deviation ratios of 5 or more and with bandedge-to-bandedge modulation, harmonic distortion of an IRIG channel is less than 1% for any modulation frequency up to channel cutoff frequency.

p. Data Response: The cutoff frequency of the low-pass output filter can be tuned from 1 Hz to 300 KHz. The response characteristic is switch selectable to be either constant-amplitude (Butterworth) or constant delay (Bessel). Three-, five-, and seven-pole configurations, having asymptotic roll-off beyond cutoff of −18, −30, and −42 Db per octave, respectively, are available. The response characteristics at cutoff are nominally −0.5 ±0.3 Db for constant-amplitude response and −3.0 ±1.0 Db for constant-delay response when operating at a deviation ratio of 2 or higher. The use of a seven-pole filter at deviations above ±15% and deviation ratios below 5 is recommended.

q. Power Requirement: See Table 2-1.

r. Line Voltage Sensitivity: A 10-volt step of line voltage anywhere between 108 and 132 volts causes a peak transient of less than 0.2% of bandwidth at the discriminator output.

s. Temperature Range: Operation, +10°C to +50°C circulating air. Storage, -55°C to +85°C.

t. Tape-Speed Compensation: For any IRIG subcarrier, the wow-and-flutter improvement is 26 Db for tape-speed variations as large as ±3% up to channel cutoff frequency at a deviation ratio of 5. An internal delay network is automatically controlled by the center frequency setting to provide the proper delay. TSC is contained only in 4140-X2, -X4, and -X6.

2.3 MECHANICAL SPECIFICATIONS

a. Panel Size: 5-1/4 inches (13.3 Cm) high by 19 inches (48.2 Cm) wide, including slides.

b. Overall Depth: 20-1/4 inches (51.4 Cm), excluding projections from front panel.

c. Weight: Net, 50 pounds (22.7 Kg). Shipping, 60 pounds (27.2 Kg).

d. Mounting: See Table 2-1.

e. Panel Paint and Lettering Colors: See Table 2-1.

Table 2-1. EMR 4140 Model Number Identification

4140 - XX - X - XX (-01 - 0)

This digit identifies the operating power requirement. Code is as follows:	This digit identifies the standard design sequences. A description is contained in paragraph 1.1.	This digit identifies the slides available for the unit. Code is as follows:	These digits identify the panel paint and lettering colors. Code is as follows:
0 -- 105 to 132 volts RMS, 47 to 65 Hz (80 watts at 120 volts).		0 -- None.	01 -- Light green, 00048W, white lettering.
7 -- 105 to 132 volts RMS, 360 to 440 Hz.		1 -- Chassis Trak, nontilting, no retractor.	02 -- Dark green, 00049W, white lettering.
8 -- 230 volts RMS ±10%, 47 to 65 Hz.		2 -- Chassis Trak, nontilting, retractor included.	03 -- Light and dark green, 00048W and 00049W, white lettering.
		3 -- Chassis Trak, tilting, no retractor.	04 -- Gray, 26492B, black lettering.
		4 -- Chassis Trak, tilting, retractor included.	99 -- Special paint.
		5 -- Jonathan, same type as 1.	
		6 -- Jonathan, same type as 2.	
		7 -- Jonathan, same type as 3.	
		8 -- Jonathan, same type as 4.	

SECTION 3

INSTALLATION AND OPERATION

3.1 INSTALLATION

The EMR Model 4140 Programmable Tunable Discriminator is shipped completely assembled and ready for mounting. Any shortage or damage to the unit should be reported in accordance with the instructions of the EMR Purchase Order Acknowledgment (POA).

The discriminator is normally equipped with telescopic mounting slides for direct installation in a standard 19-inch equipment rack. After unpacking the unit, remove the mounting slides from the discriminator and mount the slides to the internal frame of the rack. Mounting hardware for this installation is supplied with each discriminator. Insert the discriminator into the slides until the unit is firmly seated. Turn-to-lock fasteners located on either side of the discriminator front panel secure the unit in the rack.

The discriminator may be extended from the rack for servicing by loosening the front-panel turn-to-lock fasteners and pulling the unit straight out. Push-button stop-latches are located on the outside surfaces of both slides holding the unit at the maximum extension. At this point, the discriminator may be removed from the rack by depressing the pushbutton stop-latches and pulling the unit straight out.

The external electrical connections to the discriminator are terminated at connectors on the rear panel. These connectors and other rear-panel components are illustrated in Figure 3-1 and described in Table 3-1.

3.2 OPERATION

3.2.1 Local Mode of Operation

In the local mode of operation, the discriminator operating parameters are selected by front- and rear-panel controls. After selecting the operating parameters and energizing the unit, the discriminator performance may be monitored through the use of front-panel indicators and monitor jacks. Each of the operating controls, indicators, and monitor jacks is shown in Figure 3-2 and described functionally in Table 3-2.

3.2.1.1 Initial Adjustments

Prior to operating the discriminator, a balance and bandedge voltage adjustment should be made. The balance adjustment assures that the discriminator data output will be at a 0-volt level when the selected subcarrier signal input is

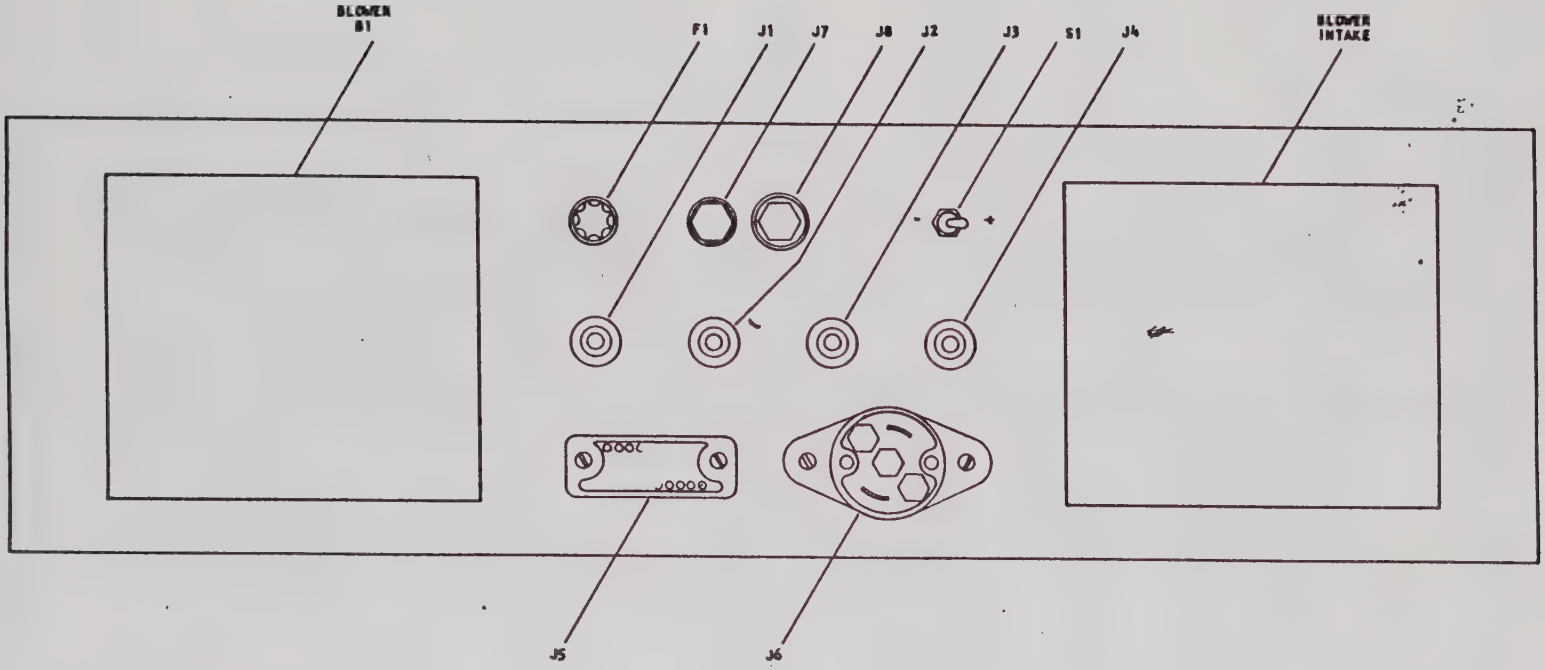

NOTE:

1. EMR DWG. CONT. NO. 4140-003.

Figure 3-1. Model 4140 Programmable Tunable Discriminator, Rear-Panel Configuration

Table 3-1. Model 4140 Programmable Tunable Discriminator, Function of Rear Panel Connectors (Ref. Figure 3-1)

DESIG.	NAME	TYPE	FUNCTION
A3J1	OUTPUT	BNC	Discriminator data output.
A3J2	TSC	BNC	Tape-speed compensation input (used on Models 4140-X2, -X4, and -X6 only).
A3J3	INPUT	BNC	FM subcarrier multiplex input.
A3J4	---	---	Not used.
A3J5	REMOTE Control	Amphenol	Used for remotely programming discriminator operating parameters. For pin-function listing and remote-programming instructions, refer to paragraph 3.2.2.
A3J6	POWER Plug	Hubbell Twist-lock	AC power input connection to discriminator power supply.
A3J7	CASE GND	Binding Post	Chassis ground.
A3J8	SIG GND	Binding Post	Signal ground.

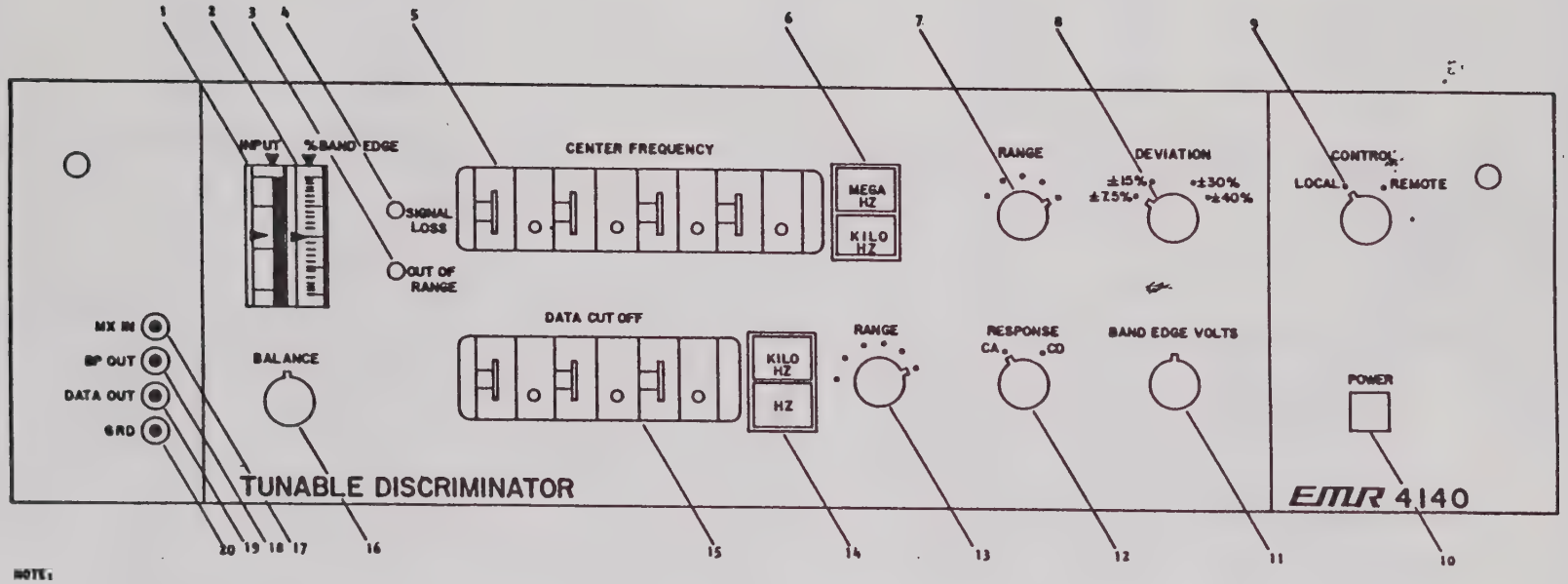

NOTE:

1. EMR DWG. CONT. NO. 4140-004.

Figure 3-2. Model 4140 Programmable Tunable Discriminator, Location of Front-Panel Controls, Indicators, and Monitor Jacks

Table 3-2. Model 4140 Programmable Tunable Discriminator, Function of Front-Panel Controls, Indicators, and Monitor Jacks (Ref. Figure 3-2)

REF. NO.	NAME	DESIG-NATION	FUNCTION
1	INPUT Meter	M2	Displays the amplitude of the incoming subcarrier signal to the discriminator. Use of a nonlinear meter scale eliminates range switching.
2	% BAND EDGE Meter	M1	Displays subcarrier signal deviation in percentage from bandcenter to either bandedge (U or L).
3	OUT OF RANGE Indicator	DS12	Illuminates when the incoming subcarrier frequency is sufficiently above or below the prescribed bandedge for the selected center frequency.
4	SIGNAL LOSS Indicator	DS11	Illuminates when the incoming subcarrier signal amplitude is less than a predetermined level. Signal loss level is adjustable up to 250 millivolts RMS but is normally adjusted to 10 millivolts RMS. When a signal loss condition exists, the discriminator output is clamped at a 0-volt level to protect output recording devices.
5	CENTER FREQUENCY Select switches and decimal point indicators	S4, 5, 6, and 7. DS3, 4, 5, and 6 (reading from right to left)	The CENTER FREQUENCY select switches select the significant digits of the center frequency. The decimal point and multiplier are affixed by the position of the RANGE switch, S3. (S7, MSD switch, is used for frequencies of 1 MHz or greater.)
6.	MEGA HZ/KILO HZ Indicator	DS1	Indicates the multiplier for the setting of the CENTER FREQUENCY select switches and decimal point indicators.

Table 3-2 (Cont'd.). Model 4140 Programmable Tunable Discriminator, Function of Front-Panel Controls, Indicators, and Monitor Jacks

REF. NO.	NAME	DESIG-NATION	FUNCTION
7	RANGE Switch	S3	Used in conjunction with the CENTER FREQUENCY select switches to select the discriminator operating center frequency range. This switch controls positioning of the decimal point and illumination of the MEGA HZ/KILO HZ indicator. The five switch positions are used as follows: a. Use position 1 for center frequencies between 100 Hz and 999 Hz. b. Use position 2 for center frequencies between 1 KHz and 9.99 KHz. c. Use position 3 for center frequencies between 10 KHz and 99.9 KHz. d. Use position 4 for center frequencies between 100 KHz and 999 KHz. e. Use position 5 for center frequencies between 1 MHz and 1.5 MHz.
8	DEVIATION Switch	S2	Used to select the bandwidth of the bandpass input filter and adjust the deviation sensitivity of the discriminator.
9	CONTROL Switch	S1	Used to select either local or remote programming. In LOCAL position, all discriminator operating parameters are selected by front panel controls. In REMOTE position, the operating parameters are selected by applying external input signals to control lines at the rear-panel remote connector J5.

Table 3-2 (Cont'd.). Model 4140 Programmable Tunable Discriminator, Function of Front-Panel Controls, Indicators, and Monitor Jacks

REF. NO.	NAME	DESIG-NATION	FUNCTION
10	POWER Switch	S13	Used to apply primary AC power to discriminator power supply.
11	BAND EDGE VOLTS Control	R1	Used to adjust the maximum output voltage corresponding to a bandedge of the FM subcarrier channel.
12	RESPONSE Switch	S8	Used to select the response characteristics of the discriminator output filter. The CA (Constant Amplitude) position is recommended for analog data outputs and CD (Constant Delay) position is recommended for pulse-type data outputs.
13	RANGE Switch	S9	Used in conjunction with the DATA CUT OFF select switches to select the discriminator output filter data-cutoff frequency range. This switch controls positioning of the decimal point and illumination of the KILO HZ/HZ indicator. The switch positions are used as follows: Use position 1 for data cutoff frequencies between 1 Hz and 9.99 Hz. Use position 2 for data cutoff frequencies between 10 Hz and 99.9 Hz. Use position 3 for data cutoff frequencies between 100 Hz and 999 Hz. Use position 4 for data cutoff frequencies between 1 KHz and 9.99 KHz.

Table 3-2 (Cont'd.). Model 4140 Programmable Tunable Discriminator, Function of Front-Panel Controls, Indicators, and Monitor Jacks

REF. NO.	NAME	DESIG-NATION	FUNCTION
13 (Cont'd.)			Use position 5 for data cutoff frequencies between 10 KHz and 99.9 KHz. Use position 6 for data cutoff frequencies between 100 KHz and 300 KHz.
14	KILO HZ/HZ Indicator	DS7	Indicates the multiplier for the setting of the DATA CUT OFF select switches and decimal point indicators.
15	DATA CUT OFF Select switches and decimal point indicators	S10, 11, and 12. DS8, 9, and 10. (Reading from right to left)	The DATA CUT OFF select switches select the significant digits of the cutoff frequency. The decimal point and multiplier are affixed by the position of the RANGE switch S9.
16	BALANCE Control	R2	Used to adjust the discriminator data output at a 0-volt level with a center-frequency input.
17	MX IN Test Jack	TP4	Test point to monitor the FM subcarrier multiplex input to the discriminator.
18	BP OUT	TP3	Test point to monitor the selected subcarrier channel output of the bandpass input filter.
19	DATA OUT	TP2	Test point to monitor the discriminator data output.
20	GND	TP1	Test point connected to discriminator ground.

operating at center frequency. Once the discriminator is balanced for a particular subcarrier channel, no further adjustment is necessary until another subcarrier channel is selected. The bandedge voltage adjustment need be made only once and will not change with selection of another subcarrier channel or selection of another deviation-sensitivity setting. The balance and bandedge voltage adjustments are accomplished as follows:

NOTE

In discriminators containing the Tape-Speed-Compensation (TSC) function, a shorting cap is attached to the rear panel. When performing the initial adjustments, install the shorting cap on the TSC input jack A3J2.

a. Using an external signal source (VCO or signal generator), apply an unmodulated center-frequency input to the discriminator at the rear-panel INPUT jack J3.

b. Depress the front-panel POWER pushbutton.

c. Position the front-panel CONTROL switch S1 to LOCAL.

d. Position the front-panel CENTER FREQUENCY thumbwheel switches (S4, S5, S6, and S7) to the significant digits of the selected center frequency. (Use S7, MSD switch, for frequencies of 1 MHz or greater.)

e. Rotate the front-panel RANGE switch S3 to affix the decimal point and illuminate the appropriate multiplier indicator.

f. Monitor the front-panel DATA OUT jack TP2 with a DC voltmeter and rotate the BALANCE control R2 for a 0-volt indication. Also, observe the front-panel % BANDEDGE meter M1 for a zero indication.

g. Position the front-panel DEVIATION switch S2 to the required position.

h. Deviate the external signal source to a frequency corresponding to a bandedge of the selected subcarrier channel.

i. Monitor the front-panel DATA OUT jack TP2 with a DC voltmeter and rotate the BANDEDGE VOLTS control R1 for the desired bandedge voltage indication. The bandedge voltage will remain constant throughout the entire deviation sensitivity range.

3.2.1.2 Operating Procedure

The following procedure is to be used as a guide for the setup and operation of the discriminator:

NOTE

In discriminators containing the Tape-Speed-Compensation (TSC) function, a shorting cap is attached to the rear panel. When not using TSC, install the shorting cap on the TSC input jack A3J2.

a. Connect the FM subcarrier multiplex input to the discriminator rear-panel INPUT jack J3.

b. Position the rear-panel SENS switch S1 to negative (−) or positive (+) as required. In the (−) position, an increase in signal-input frequency will result in a decrease in discriminator output voltage. In the (+) position, an increase in signal-input frequency will result in an increase in discriminator output voltage.

c. Depress the front-panel POWER pushbutton.

d. Position the front-panel CONTROL switch S1 to LOCAL.

e. Position the front-panel DEVIATION switch S2 to the required position.

f. Position the front-panel CENTER FREQUENCY thumbwheel switches to the significant digits of the selected center frequency.

g. Rotate the front-panel RANGE switch S3 to affix the decimal point and illuminate the appropriate multiplier indicator.

h. Position the front-panel DATA CUTOFF thumbwheel switches to the significant digits of the selected data-cutoff frequency.

i. Rotate the front-panel RANGE switch S9 to affix the decimal point and illuminate the appropriate multiplier indicator.

j. Position the front-panel RESPONSE switch S8 to CA or CD as required. (The CA position is recommended for analog-type data outputs and the CD position is recommended for pulse-type data outputs.)

k. Observe the front-panel INPUT meter M2 for an input level within the discriminator specifications. (Refer to paragraph 2.2, step e.)

l. Observe that the front-panel SIGNAL LOSS and OUT OF RANGE indicators are extinguished.

3.2.2 Remote Mode of Operation

In the remote mode of operation, the discriminator operating parameters are selected by applying external input signals to control lines at the rear-panel remote connector A3J5. These input signals are in the form of ground level (0-volt) inputs at the appropriate pins to select each operating point.

To place the discriminator under remote control, position the front-panel CONTROL switch, S1, to REMOTE. This disables all local controls except the POWER pushbutton switch and the BANDEDGE VOLTS control. The band-edge voltage is adjusted while under local control, and when switching to remote control, this setting will remain constant throughout the entire operating range of the discriminator.

NOTE

When switching to the remote mode of operation, rotate the front-panel BALANCE control fully counter-clockwise. This enables proper operation of the external balance function.

The operating points and program instructions are contained in Table 3-3. The rear-panel remote connector and pin-location diagram is shown in Figure 3-3.

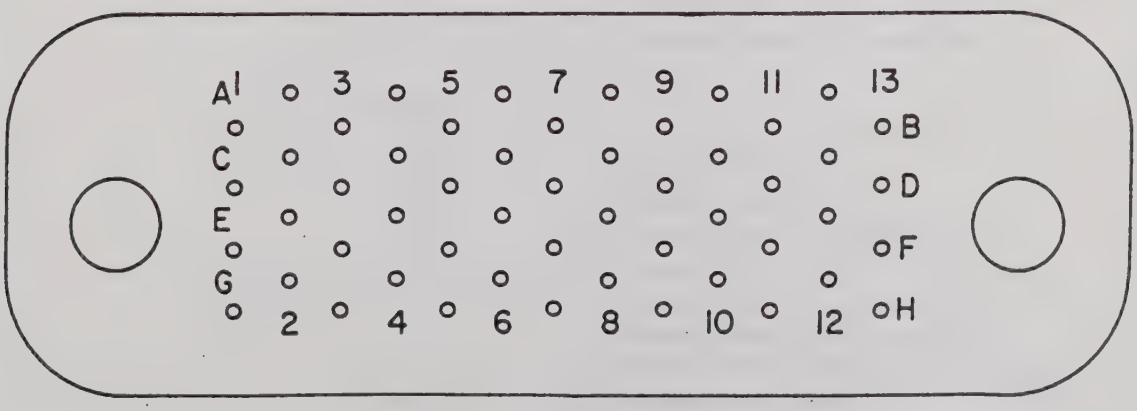

Figure 3-3. Remote Control Connector A3J5, Pin-Location Diagram

Table 3-3. Remote Control Programming Instructions
(Ref. Figure 3-3)

OPERATING PARAMETERS TO BE SELECTED		PROGRAM INSTRUCTION (AT REAR PANEL REMOTE CONNECTOR J5)
NAME	TYPE	
Center Frequency Digits	MSD (Most Significant Digit)	
	1	Ground Pin F-13
	MSD-1	
	1	Ground Pin B-7
	2	Ground Pin A-8
	3	Ground Pins B-7 and A-8
	4	Ground Pin B-5
	5	Ground Pins B-5 and B-7
	6	Ground Pins B-5 and A-8
	7	Ground Pins B-5, A-8, and B-7
	8	Ground Pin A-6
	9	Ground Pins A-6 and B-7
	MSD-2	
	1	Ground Pin B-11
	2	Ground Pin A-12
	3	Ground Pins B-11 and A-12
	4	Ground Pin B-9
	5	Ground Pins B-9 and B-11
	6	Ground Pins B-9 and A-12
	7	Ground Pins B-9, A-12, and B-11
	8	Ground Pin A-10
	9	Ground Pins A-10 and B-11
	MSD-3	
	1	Ground Pin D-1
	2	Ground Pin C-2
	3	Ground Pins C-2 and D-1
	4	Ground Pin B-13
	5	Ground Pins B-13 and D-1
	6	Ground Pins B-13 and C-2
	7	Ground Pins B-13, C-2 and D-1
	8	Ground Pin D-13
	9	Ground Pins D-13 and D-1

Table 3-3 (Cont'd.). Remote Control Operating Instructions

OPERATING PARAMETERS TO BE SELECTED		PROGRAM INSTRUCTION (AT REAR PANEL REMOTE CONNECTOR J5)
NAME	TYPE	
Center Frequency Range	100 HZ to 999 HZ	Ground Pin A-2
	1 KHZ to 9.99 KHZ	Ground Pin B-1
	10 KHZ to 99.9 KHZ	Ground Pin A-4
	100 KHZ to 1.5 MHZ	Ground Pin B-3
Deviation Sensitivity	±7.5%	Ground Pin C-4
	±15%	Ground Pin D-3
	±30%	Ground Pin C-6
	±40%	Ground Pin D-5
Data Cutoff Frequency Digits	MSD	
	1	Ground Pin D-9
	2	Ground Pin C-10
	3	Ground Pins D-9 and C-10
	4	Ground Pin D-7
	5	Ground Pins D-7 and D-9
	6	Ground Pins D-7 and C-10
	7	Ground Pins D-7, C-10 and D-9
	8	Ground Pin C-8
	9	Ground Pins C-8 and D-9
	MSD-1	
	1	Ground Pin F-1
	2	Ground Pin E-2
	3	Ground Pins F-1 and E-2
	4	Ground Pin D-11
	5	Ground Pins D-11 and F-1
	6	Ground Pins D-11 and E-2
	7	Ground Pins D-11, E-2, and F-1
	8	Ground Pin C-12
	9	Ground Pins C-12 and F-1

Table 3-3 (Cont'd.). Remote Control Operating Instructions

OPERATING PARAMETERS TO BE SELECTED		PROGRAM INSTRUCTION (AT REAR PANEL REMOTE CONNECTOR J5)
NAME	TYPE	
Data Cutoff Frequency Digits (Cont'd.)	MSD-2	
	1	Ground Pin F-5
	2	Ground Pin E-6
	3	Ground Pins F-5 and E-6
	4	Ground Pin F-3
	5	Ground Pins F-3 and F-5
	6	Ground Pins F-3 and E-6
	7	Ground Pins F-3, E-6, and F-5
	8	Ground Pin E-4
	9	Ground Pins E-4 and F-5
Data Cutoff Frequency Range	1 HZ to 9.99 HZ	Ground Pin E-10
	10 HZ to 99.9 HZ	Ground Pin F-9
	100 HZ to 999 HZ	Ground Pin E-12
	1 KHZ to 9.99 KHZ	Ground Pin H-13
	10 KHZ to 99.9 KHZ	Ground Pin F-11
	100 KHZ to 300 KHZ	Ground Pin G-8
Output Filter Response	CA	Ground Pin F-7
	CD	Ground Pin E-8
External Balance Input		Pin H-3
-20-Volt Output		Pin G-4
+12-Volt Output		Pin G-6
Ground		Pins G-2, H-1, and H-7

3.2.3 Tape-Speed-Compensation (TSC) System

Certain discriminators may be used in a tape-speed-compensation (TSC) system connected as is shown in Figure 3-4. This system requires a reference discriminator and a signal delay unit to be used in conjunction with the Model 4140 Discriminator. Models 4140-X2, -X4, and -X6 contain the TSC capability.

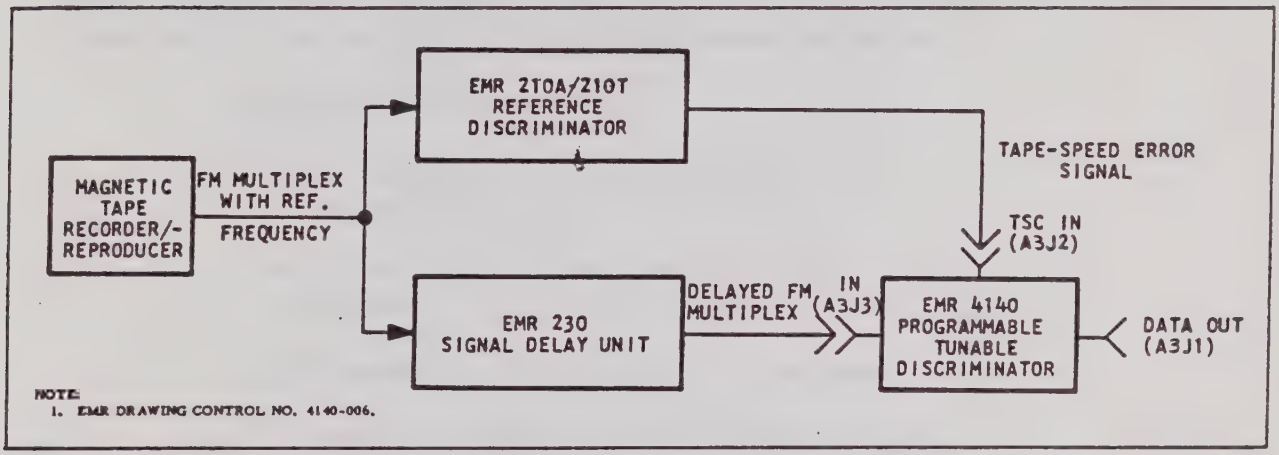

Figure 3-4. Tape-Speed-Compensation System, Block Diagram

In this system, the prerecorded FM multiplex is applied to a reference discriminator and a signal delay unit. The reference discriminator accepts the reference frequency from the FM multiplex and detects any reference frequency modulation incurred during the recording or playback process. Any reference-frequency modulation results in a tape-speed-error signal at the reference discriminator output.

The signal delay unit delays the FM multiplex an amount equal to the delay in the reference discriminator. The delayed FM multiplex and the tape-speed-error signal are then applied to the Model 4140 via connectors A3J3 and A3J2, respectively. A bandpass input filter in the Model 4140 extracts the subcarrier channel from the FM multiplex and an FM detector detects the data in that channel.

If tape-speed variations have occurred, these variations result in erroneous subcarrier modulations and would be detected as data in that subcarrier channel. However, the tape-speed-error signal controls the FM detector compensating for the erroneous modulations and only the true subcarrier channel data is applied to the Model 4140 data output.

If TSC is not used, the TSC input A3J2 must be shorted to ground. A shorting cap is attached to the discriminator rear panel for this purpose.

3.2.4 Tape-Speed-Compensation (TSC) Gain and Delay Adjustment

The TSC gain and delay are factory adjusted for optimum operation over a wide range of subcarrier frequencies. More TSC improvement for a particular subcarrier channel may be obtained by adjusting the gain and delay to match the characteristics of that channel; however, once these adjustments are made, or after maintenance is performed in the TSC circuit, the gain and delay adjustments must be made each time a new subcarrier channel is selected. To perform the TSC gain and delay adjustments, proceed as follows:

a. Equipment required--

   1. Signal Generator: Hewlett Packard 200 CD or equivalent.

   2. DC Power Supply: Power Designs 4005 or equivalent.

   3. DC Voltmeter: John Fluke 801 or equivalent.

   4. Voltage-Controlled Oscillator: EMR Model 236 or equivalent.

   5. Frequency Counter: Beckman 736 OR or equivalent.

   6. RMS Meter: Hewlett Packard 400D or equivalent.

   7. TSC ON-OFF Toggle Switch.

b. The TSC gain adjustment is as follows:

   1. Connect the equipment as shown in Figure 3-5.

   2. Adjust the SIG. GEN. for a 1-volt RMS signal at a frequency corresponding to the subcarrier channel center frequency.

   3. Adjust the Model 4140 controls to accept the selected subcarrier channel. (Data cutoff frequency setting should correspond to a modulation index [MI] of 5.)

   4. Balance the Model 4140 for a 0-volt level at the discriminator DATA OUT.

   5. Adjust the SIG. GEN. to a frequency corresponding to 1.03 times the subcarrier channel center frequency.

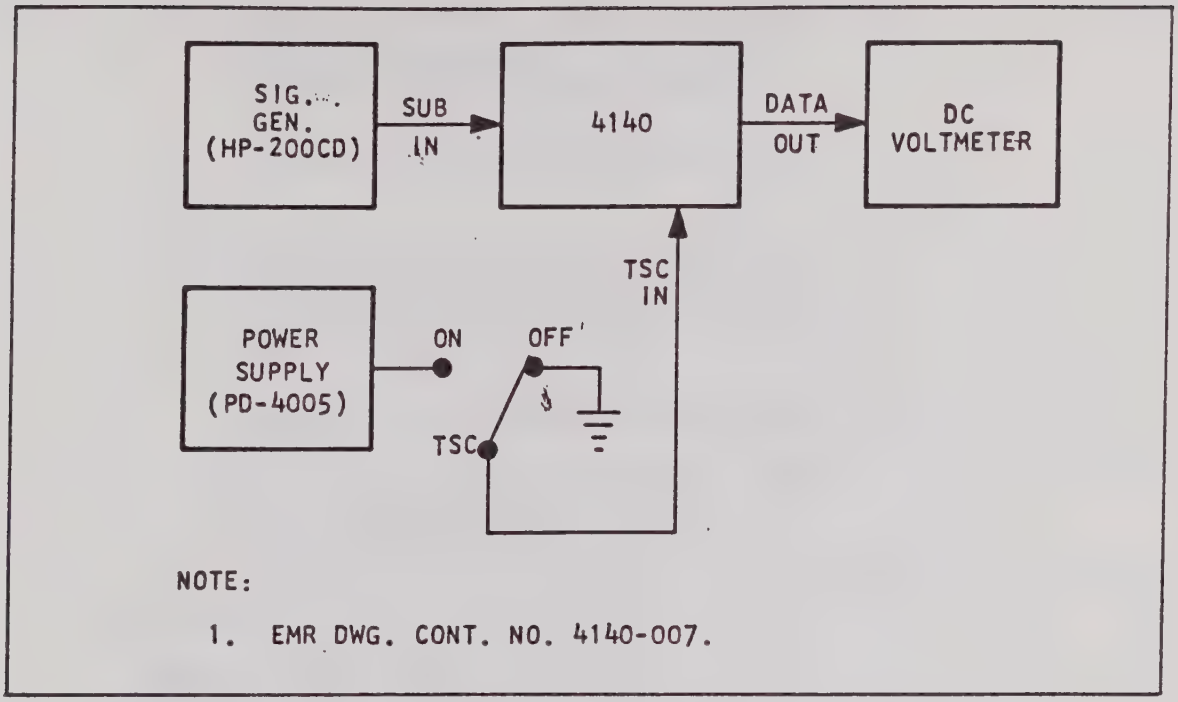

Figure 3-5. TSC Gain Adjustment, Equipment Setup

6. Adjust the POWER SUPPLY for a 4.000-volt DC level and place the TSC ON/OFF switch to ON.

7. On the Model 4140 TSC card A2J4, adjust gain potentiometer R49 (see Figure 5-10) for a 0-volt level at the discriminator DATA OUT.

c. The TSC delay adjustment is as follows:

1. Connect the equipment as shown in Figure 3-6. (Use a positive-sense VCO without the output filter.)

2. With the TSC ON/OFF switch in the OFF position, adjust the VCO for a frequency corresponding to the subcarrier channel center frequency.

3. Adjust the POWER SUPPLY for a 4.000-volt DC level and place the TSC ON/OFF switch to ON.

4. Adjust the VCO DEV SENS to obtain a frequency corresponding to 1.03 times the subcarrier channel center frequency.

5. Connect the equipment as shown in Figure 3-7.

6. Adjust the SIG. GEN. for a 1-volt RMS level at a frequency corresponding to an MI of 5 for the selected subcarrier channel.

7. Position the TSC ON/OFF switch to ON.

8. On the Model 4140 TSC card A2J4, adjust the delay potentiometer R26 for a 0-volt discriminator DATA OUT.

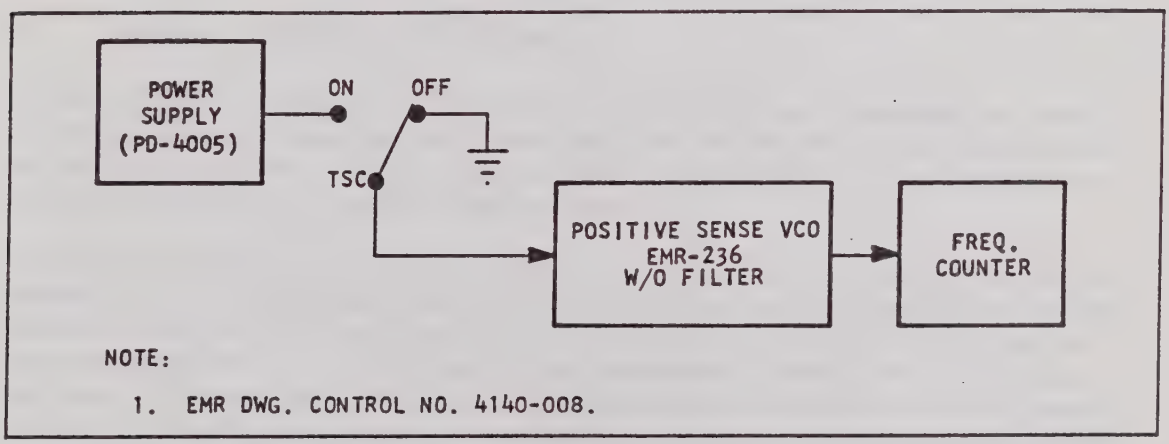

Figure 3-6. VCO Calibration for TSC Delay Adjustment, Equipment Setup

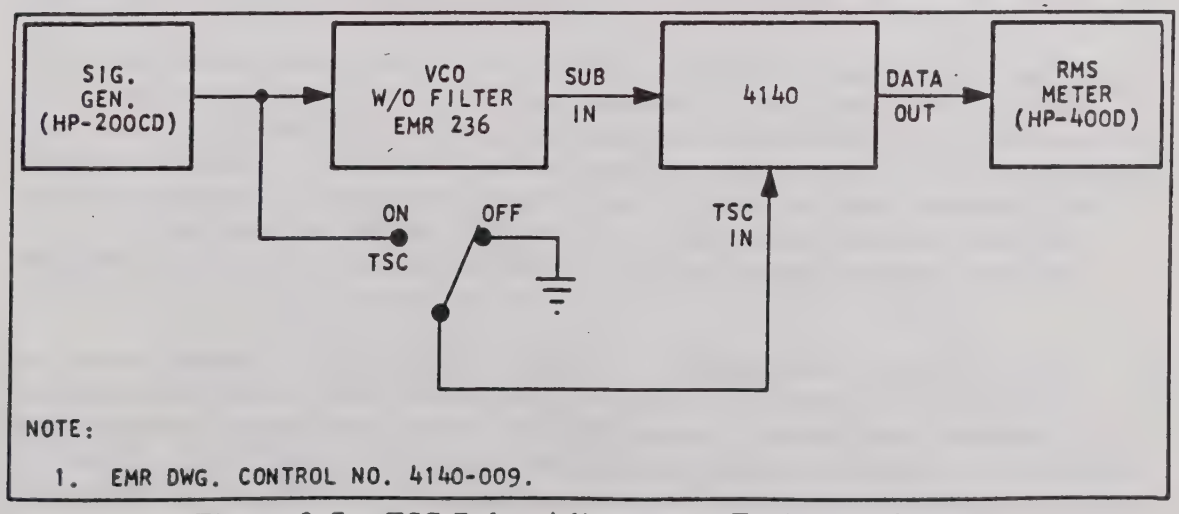

Figure 3-7. TSC Delay Adjustment, Equipment Setup

SECTION 4

THEORY OF OPERATION

4.1 GENERAL

This section contains the functional theory of operation for the Model 4140 Programmable Tunable Discriminator. The theory discussion is presented at two levels, general theory of operation, contained in paragraph 4.2 and detailed theory of operation, contained in paragraph 4.3. The general theory of operation is discussed with reference to the simplified block diagram shown in Figure 4-1. The detailed theory of operation is discussed with reference to the detailed block diagram, shown in Figure 4-2, and simplified schematic diagrams integrated with the particular discussions. Detailed schematic diagrams are contained in Section 5 of this manual.

4.2 GENERAL THEORY OF OPERATION

The discriminator accepts an FM multiplex of subcarrier channels, extracts a subcarrier channel from the multiplex, and detects the intelligence data contained in that channel. The intelligence data is presented at the discriminator output in the form of varying analog voltages.

As shown in Figure 4-1, an FM multiplex of subcarrier channels is applied to a tunable bandpass input filter (BPIF). Control lines from the front-panel center frequency and deviation switches energize relays in the BPIF circuits which select components to extract a particular subcarrier channel from the input multiplex. The selected subcarrier channel output is applied to a front-panel test jack, used for monitoring purposes, and to a three-stage high-gain limiter circuit. The primary function of the limiter circuit is to convert the subcarrier signal to a substantially constant-amplitude square wave.

The limiter circuit also provides outputs to a subcarrier amplitude meter circuit and a zero-signal detector circuit. The subcarrier amplitude meter circuit drives the front-panel INPUT meter which displays the magnitude of the incoming subcarrier channel. The zero-signal detector circuit senses a condition in which the subcarrier channel amplitude drops below a predetermined threshold level and, when this condition exists, illuminates a front-panel SIGNAL LOSS lamp. The signal-loss output also activates the clamp relays which clamp the discriminator data output at a ground level.

The Limiter square-wave output is applied to a regenerative trigger circuit which provides even further waveshaping and phase-splitting before detecting the subcarrier channel modulation. Complementary square-wave outputs from the trigger circuit drive two identical sections of a pulse-averaging FM detector. Each section of the detector operates on alternate half cycles of the subcarrier

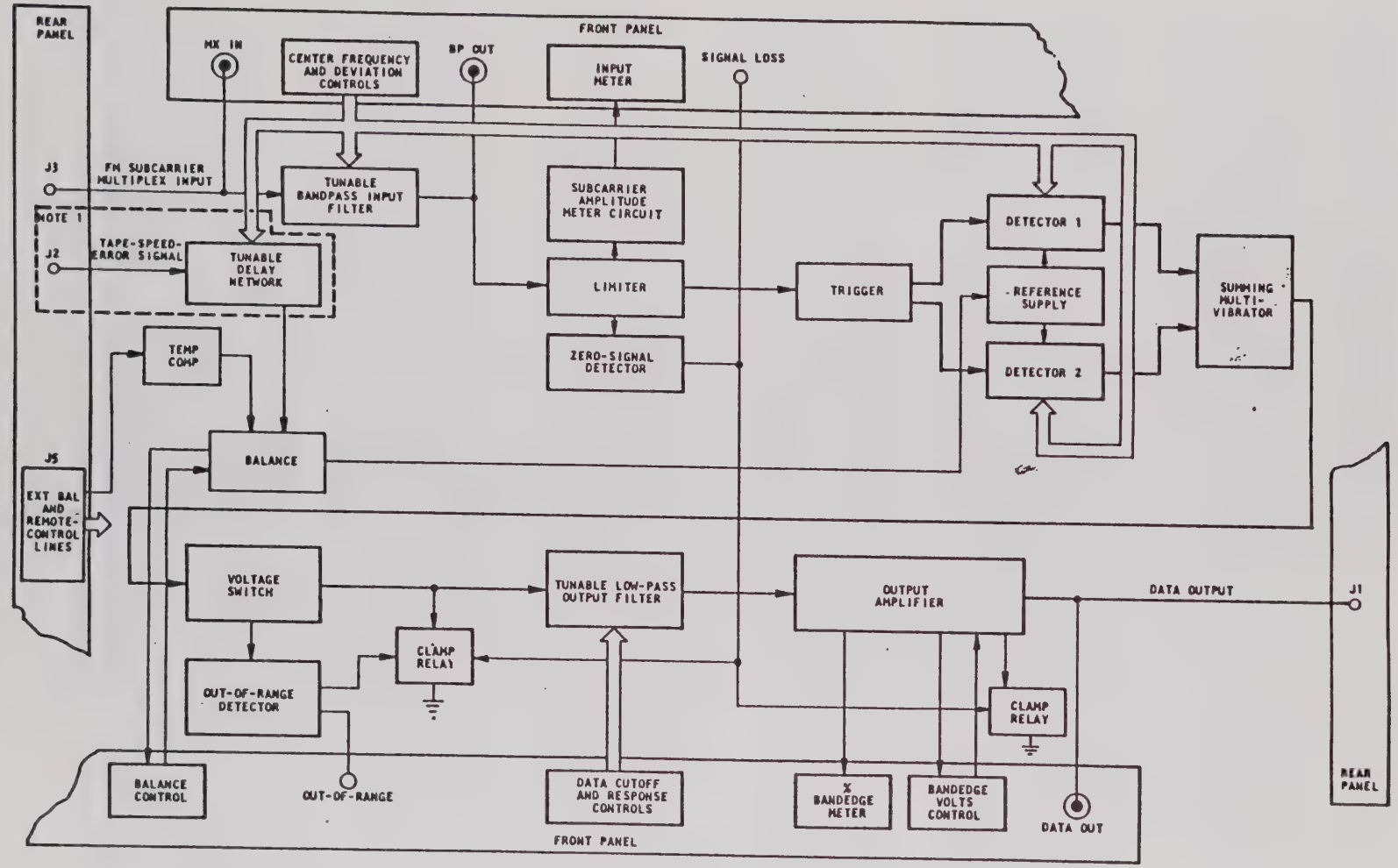

NOTE:

1. USED IN DISC WITH TAPE-SPEED-COMPENSATION FUNCTION
2. EMR DRAWING CONTROL NO. 4140-010.

Figure 4-1. Simplified Block Diagram, Model 4140 Programmable Tunable Discriminator

signal to provide a square-wave output with a duty cycle proportional to the FM modulation on the subcarrier input signal.

The detector outputs are summed in a high-speed summing multivibrator circuit and applied to a voltage switch circuit. The voltage switch circuit establishes precise amplitude levels of the detected subcarrier signal before filtering in an output filter to recover the low frequency intelligence data contained in the subcarrier channel.

Another output from the voltage switch drives the out-of-range detector circuit. This circuit senses a condition in which the incoming subcarrier frequency is sufficiently above or below the prescribed frequency of the subcarrier channel bandedge. When this condition occurs, the out-of-range detector circuit activates the clamp relay and illuminates the front-panel OUT OF RANGE lamp. The clamp relay clamps the voltage switch circuit output at a ground level, thereby removing any signal at the discriminator data output.

The voltage switch circuit output is applied to a tunable low-pass output filter. Control lines from front-panel data-cutoff switches and range switches energize relays in the output filter which select components to pass only the low-frequency intelligence data in the subcarrier channel. The output filter response characteristics (constant-amplitude or constant-delay) are selected by a front-panel RESPONSE switch.

An output amplifier circuit is employed at the discriminator data output to provide current drive capability for output recording and readout devices. This circuit also provides an output to the front-panel % BANDEDGE meter which displays a relative indication of the magnitude and direction of the subcarrier deviation. The discriminator output voltage, representing a bandedge of the subcarrier channel, is adjusted by a front-panel BANDEDGE VOLTS control.

Other functional circuits in the discriminator include a temperature compensation circuit, a tunable delay network for tape-speed-error signal, a detector balance circuit, and a reference supply. The temperature compensation circuit, balance circuit (including the front-panel balance control), and reference supply controls the detector outputs to provide a zero-volt discriminator data output when the subcarrier input is operating at center frequency.

The same principle is used in discriminators containing the tape-speed-compensation function. In these units, the tape-speed-error signal is applied to a tunable delay network. Control lines from front-panel center frequency and deviation switches activate relays in the delay network to select components which delay the tape-speed-error signal input an amount equal to the delay in the discriminator BPIF. The tape-speed-error signal is then applied to the balance circuit which modulates the reference supply again controlling the detector outputs to compensate for tape-speed variations.

The discriminator may be remotely programmed and operated by external equipment such as a computer, remote control panel, or programmer. In this mode of operation, the discriminator operating parameters are selected by applying external signals to remote control lines at the rear-panel remote connector. These control lines are routed to the same circuits as the front-panel control lines and control the discriminator in the same manner as previously described. An external balance (EXT. BAL.) input operates in conjunction with the temperature-compensation circuit to balance the detectors from a remote location.

4.3 DETAILED THEORY OF OPERATION

The detailed theory of operation contains a description of each functional circuit in the discriminator. These circuits are shown on the detailed block diagram, Figure 4-2, and are discussed with reference to this diagram and simplified schematic diagrams shown in Figures 4-3 through 4-9. For detailed schematic diagrams, refer to Section 5 of this manual.

4.3.1 Bandpass Input Filter (BPIF)

The BPIF is a two-section active filter designed to extract one subcarrier channel from an input multiplex of subcarrier channels. Components of the BPIF are contained on printed-circuit cards in card-tray locations A2J1, A2J2, and A2J3. The two sections of the BPIF are contained on printed-circuit cards in A2J1 and A2J3, and associated circuits are contained on the Input card, A2J2.

The FM multiplex input is applied through rear-panel connector A3J3 to an input amplifier on the Input card A2J2. This circuit provides proper terminating impedance for the FM multiplex. The input impedance is greater than 100K ohms resistive for all frequencies within the range of discriminator operation. The output of this amplifier is applied through a second amplifier stage to the first pole of the BPIF.

The first BPIF section (A2J1), containing two poles, operates essentially as a bandpass section and the second BPIF section (A2J3), also containing two poles, operates as a low-pass section. These two sections connected in series form a bandpass filter configuration tuned to pass only the assigned frequencies of the selected subcarrier channel. The two BPIF sections are isolated by an isolation amplifier on the Input card, A2J2, thus eliminating any interaction between the two sections. Center frequency and bandwidth adjustments in each section are made by energizing relays in the BPIF which select components necessary to provide the proper BPIF frequency response. These relays are controlled by either the front-panel center frequency and deviation switches or remote-control inputs from an external source. A front-panel CONTROL switch provides a means of switching from local control to remote control.

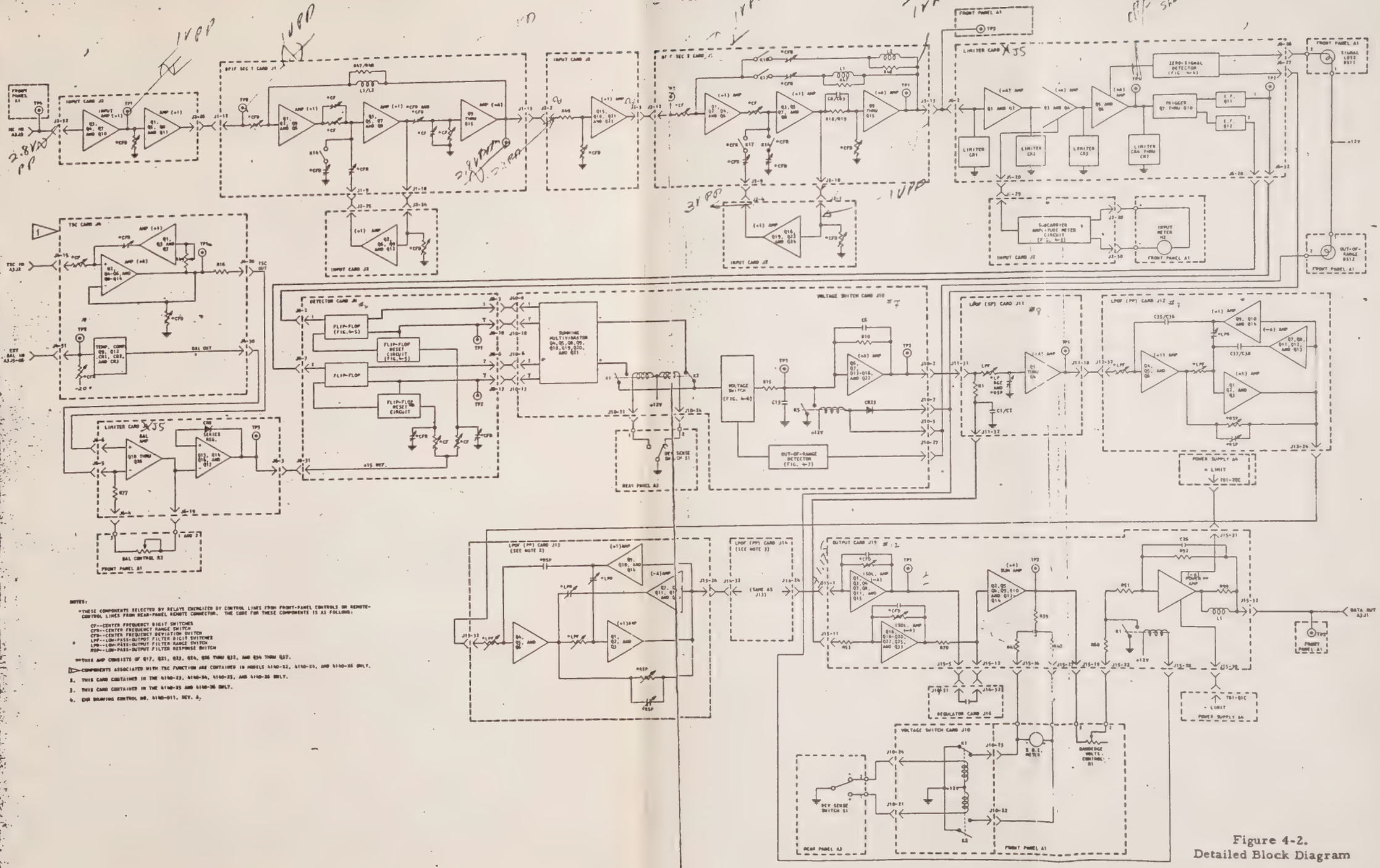

NOTES:

*THESE COMPONENTS SELECTED BY RELAYS ENERGIZED BY CONTROL LINES FROM FRONT-PANEL CONTROLS OR REMOTE-CONTROL LINES FROM REAR-PANEL REMOTE CONNECTOR. THE CODE FOR THESE COMPONENTS IS AS FOLLOWS:

CF--CENTER FREQUENCY DIGIT SWITCHES
CFR--CENTER FREQUENCY RANGE SWITCH
CFD--CENTER FREQUENCY DEVIATION SWITCH
LPF--LOW-PASS-OUTPUT FILTER DIGIT SWITCHES
LPR--LOW-PASS-OUTPUT FILTER RANGE SWITCH
RSP--LOW-PASS-OUTPUT FILTER RESPONSE SWITCH

**THIS AMP CONSISTS OF Q17, Q21, Q23, Q24, Q26 THRU Q32, AND Q34 THRU Q37.

[1]—COMPONENTS ASSOCIATED WITH TSC FUNCTION ARE CONTAINED IN MODELS 6140-32, 6140-36, AND 6140-26 ONLY.

2. THIS CARD CONTAINED IN THE 6140-23, 6140-34, 6140-25, AND 6140-26 ONLY.

3. THIS CARD CONTAINED IN THE 6140-25 AND 6140-36 ONLY.

4. ENR DRAWING CONTROL NO. 6140-011, REV. A.

Figure 4-2.
Detailed Block Diagram

Also included within the BPIF sections are isolation amplifiers. These are high-input-impedance and low-output-impedance unity-gain amplifiers which isolate portions of the feedback networks, thereby eliminating interaction between response-determining components in the BPIF.

4.3.2 Limiter

The Limiter is a three-stage high-gain limiter/amplifier circuit which converts the single channel subcarrier signal into a substantially constant-amplitude square wave. Components of this circuit are contained on the Limiter printed-circuit card in the A2J6 card-tray location.

Each of the limiter stages consists of a clamp diode circuit and an amplifier circuit. The clamp diodes limit the voltage swing at the input of each amplifier stage thus preventing a saturated condition. The amplifier circuits consist of an emitter-follower input stage and a one-transistor amplifier stage. AC coupling is employed between limiter stages to provide base-line limiting of the subcarrier signal, thus eliminating the effect of amplitude modulation and amplifier bias changes.

The limiter outputs are applied to a subcarrier-amplitude meter circuit, a zero-signal detector circuit, and a trigger circuit. These circuits are discussed in separate paragraphs of this section.

4.3.3 Subcarrier Amplitude Meter Circuit

The Subcarrier Amplitude Meter circuit is employed to drive an input meter which indicates the magnitude of the incoming subcarrier signal. Components of this circuit are contained on the Input printed-circuit card in the A2J2 card-tray location and the associated input meter is mounted on the discriminator front panel.

This circuit, shown in Figure 4-3, consists of an operational amplifier, a diode rectifier circuit, and front-panel INPUT meter. The subcarrier input signal from the second stage of the limiter circuit is applied to the operational amplifier consisting of transistors Q13, Q14, Q17, and Q20. The amplifier output is coupled through capacitor C18, rectified by diodes CR3, CR4, and CR5 and applied to the INPUT meter. A portion of the amplifier output is applied through resistor R63 to complete the operational amplifier feedback loop.

4.3.4 Zero-Signal Detector Circuit

The Zero-Signal Detector circuit senses a condition in which the incoming subcarrier signal amplitude is sufficiently low so as to result in possible erroneous data at the discriminator output. Components of this circuit are contained on the Limiter printed-circuit card in the A2J6 card-tray location.

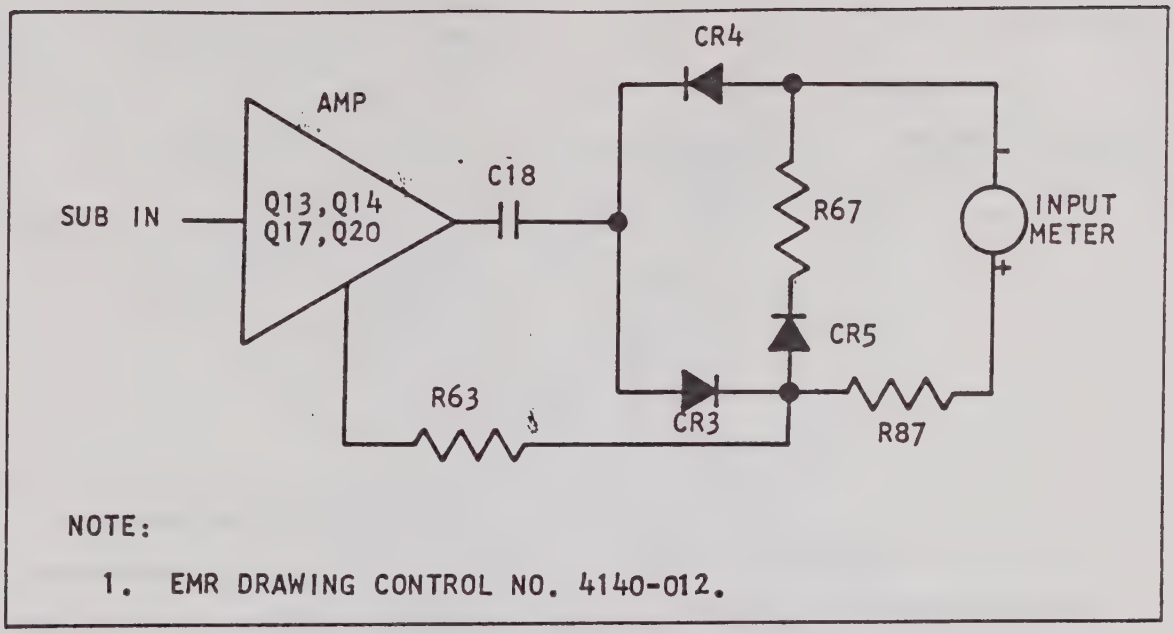

Figure 4-3. Simplified Schematic Diagram, Subcarrier Amplitude Meter Circuit

This circuit, shown in Figure 4-4, consists of an amplifier, a diode rectifier, a transistor switch, and a comparator. The signal input from the third stage of the limiter is amplified by transistor Q27 and half-wave rectified by diode CR9. The rectifier supplies positive-going pulses to transistor switch Q28. If the positive excursions exceed the turn-on voltage of transistor Q28, a ground level signal is applied across capacitor C31 and the comparator will not generate a signal-loss output. If, however, the input voltage to Q28 is not of sufficient amplitude to maintain current through Q28, C31 charges toward the +24-volt level triggering the comparator and a signal-loss output is generated. This output illuminates the front-panel SIGNAL LOSS indicator and activates the clamp relays thereby clamping the discriminator output at a ground level. Resistor R72 is used to adjust the threshold level in this circuit.

4.3.5 Trigger Circuit

The Trigger circuit is a nonsaturating regenerative feedback circuit which accepts the third-stage limiter output and conditions the subcarrier signal for application to the FM detector. Components of this circuit are contained on the Limiter printed-circuit card in the A2J6 card-tray location.

This circuit consists of an input clamp diode stage, a regenerative trigger stage, and emitter-follower output stages. The clamp diodes, CR4 through CR7, limit the subcarrier signal amplitude to prevent saturation in the trigger stage. On the positive edges of the subcarrier signal, the regenerative trigger, Q7 through Q10, is triggered providing complementary square-wave signals to the emitter-follower output stages Q11 and Q12. The Q11/Q12 outputs (180° out-of-phase) are then applied to the FM detector circuit.

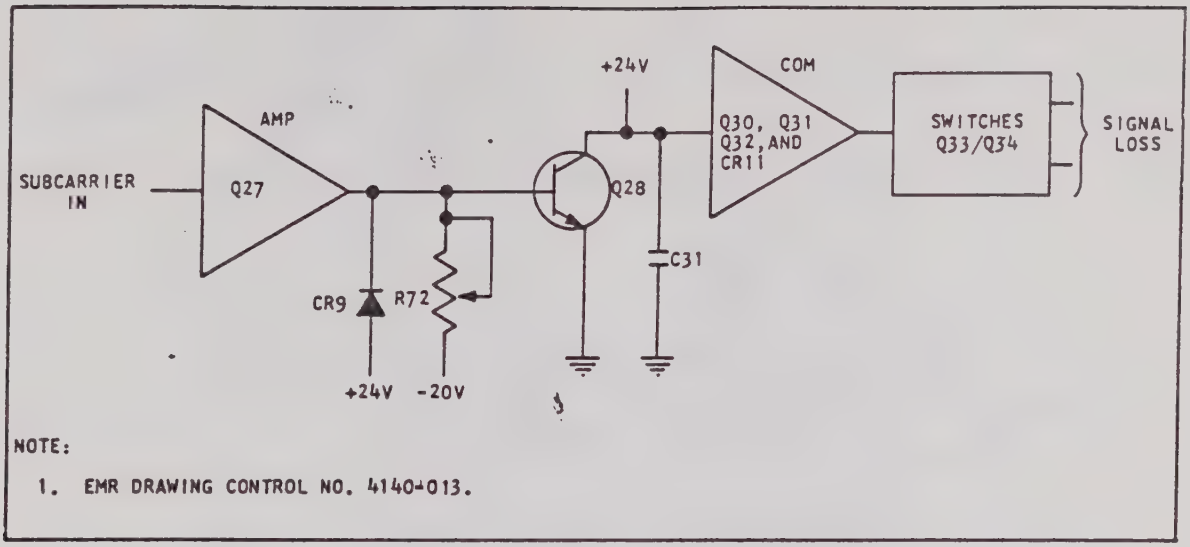

Figure 4-4. Simplified Schematic Diagram, Zero-Signal Detector Circuit

4.3.6 FM Detector

The FM Detector contains two identical sections which accept complementary square-wave inputs from the Trigger circuit and generate square-wave outputs with duty cycles proportional to the subcarrier input modulation. Components of this circuit are contained on the Detector printed-circuit card in the A2J8 card-tray location.

Since each section is identical, only Section 1 is discussed in detail. The circuits of Section 1, shown in Figure 4-5, consist of a flip-flop stage, a transistor switch, and a comparator stage. Each positive edge of the square-wave input from the Trigger circuit sets the flip-flop such that the $\overline{1}$ output decreases to approximately −6 volts and the 1 output increases to approximately +6 volts. With −6-volt level on the base of the transistor switch, Q3, the switch opens and the capacitor (CFR) begins to charge toward the +15 REF source voltage input. As the voltage across the capacitor reaches the value of the V_R, set by diode CR17, the comparator is triggered generating a reset pulse to reset the flip-flop. When reset, the $\overline{1}$ flip-flop output increases to approximately +6 volts and the $\overline{1}$ output decreases to approximately −6 volts. With a +6-volt level at the base of Q3, Q3 is saturated discharging the capacitor (CFR). Thus, the $\overline{1}$ output remains negative for a predetermined length of time depending on the charge time of the capacitor. This length of time is nominally 1/4 the period of one subcarrier cycle. The positive excursions and the positive pulse widths of the $\overline{1}$ output are controlled by the subcarrier signal frequency. This produces a square-wave output with a duty cycle proportional to the subcarrier signal modulation.

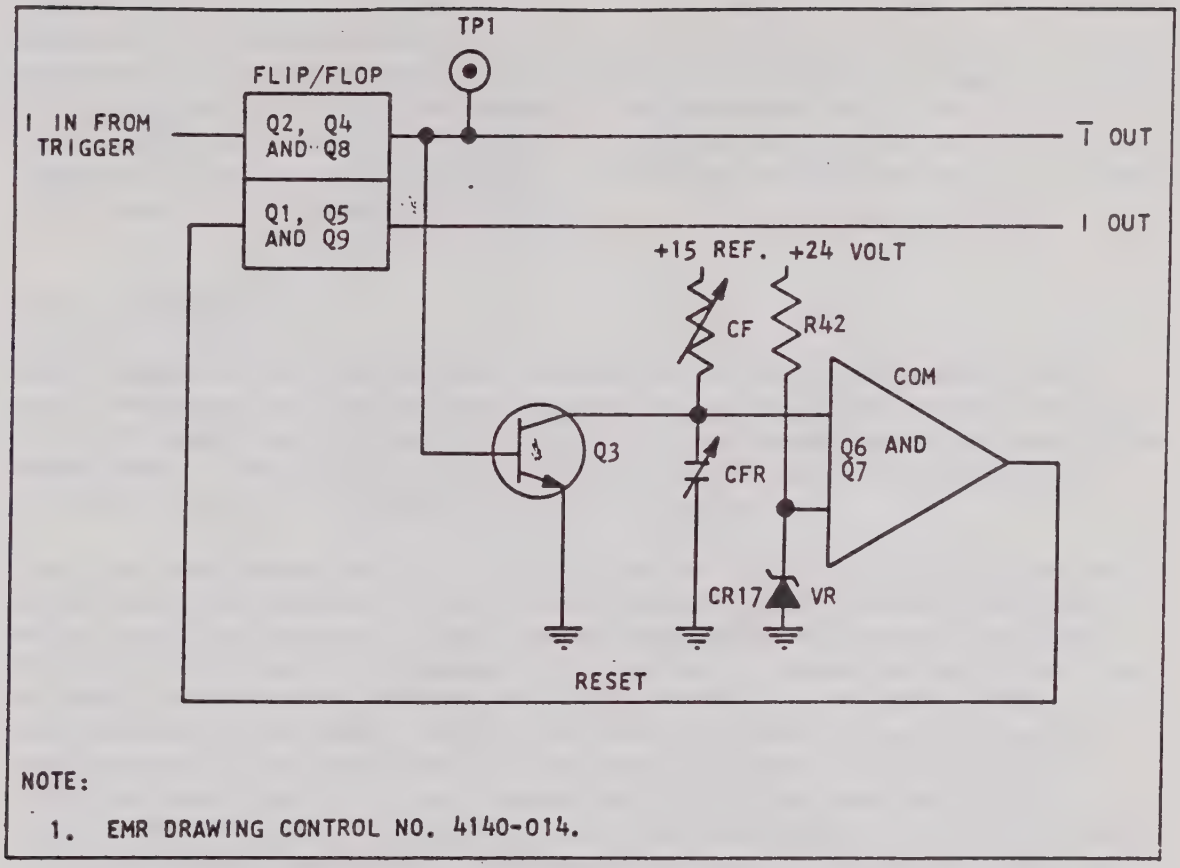

Figure 4-5. Simplified Schematic Diagram, FM Detector Section 1

The tunable capacitor (CFR) and resistor (CF) connected between the +15 REF source voltage and ground, are selected by front-panel center frequency digit and range switches. These components are variable with the selected center frequency to provide the proper RC time-constant for the generation of the flip-flop reset. As the center frequency increases, the RC time constant is decreased so that the flip-flop reset occurs before the next subcarrier cycle.

Another variable input to this circuit is the +15 REF source voltage. A change in the value of this source voltage will also change the time at which the comparator generates the flip-flop reset. Therefore, the pulse duration of the flip-flop output is adjusted by varying the +15 REF source voltage input. The generation and control of this input is discussed in paragraph 4.3.12 of this section.

4.3.7 Summing Multivibrator

The Summing Multivibrator is a high-speed bistable circuit which sums the four FM Detector outputs. Components of this circuit are contained on the Voltage Switch printed-circuit card in the A2J10 card-tray location.

This circuit operates essentially as an OR-type bistable multivibrator which is triggered on the edges of the four-phase detector square-wave outputs, thereby maintaining the modulation component. Complementary square-wave outputs from this circuit are applied to two relays, K1 and K2. These relays are controlled by the rear-panel DEV SENSE switch which permits selection of positive (+) or negative (−) deviation sensitivity.

4.3.8 Voltage Switch

The Voltage Switch circuit accepts a square-wave input from the summing multivibrator and establishes precise square-wave amplitude levels. This prevents any square-wave amplitude modulation from causing erroneous data in the output filter. Components of this circuit are contained on the Voltage Switch printed-circuit card in the A2J10 card-tray location.

Since the square-wave input to the Voltage Switch has a duty cycle proportional to the subcarrier modulation, the Voltage Switch is triggered on every edge of the incoming square wave, thereby maintaining subcarrier channel modulation component. A simplified schematic of this circuit is shown in Figure 4-6. As the input square wave is positive going, transistor Q2 is saturated and Q10 is back biased to the off state. With Q2 saturated, a zero-volt level is applied through diode CR2 and resistor R6 which drives transistor Q3 to saturation. When this occurs, the $+V_R$, set by diode CR1, is applied through Q3 to the voltage switch output. This output remains until the input square wave reverts to a negative-going transition. On the negative edge, Q2 is turned off and Q10 is saturated, supplying a 0-volt level through CR5 to transistor Q11. This level drives Q11 to saturation and the $-V_R$, set by diode CR6, is applied through Q11 to the voltage switch output.

The voltage switch output is applied through resistor R15 to an operational amplifier which provides impedance matching between the voltage switch and the output filter.

Another function of the voltage switch is to provide outputs to the Out-of-Range Detector circuit. A detailed description of this circuit is contained in paragraph 4.3.9 of this section.

4.3.9 Out-of-Range Detector

The Out-of-Range Detector detects a condition in which the incoming subcarrier signal is operating at a frequency above or below the prescribed subcarrier channel bandedge. Components of this circuit are contained on the Voltage Switch printed-circuit card in the A2J10 card-tray location.

This circuit, shown in Figure 4-7, consists of a positive detector and a negative detector. Since the operation of each detector is identical, only the positive detector is discussed in detail.

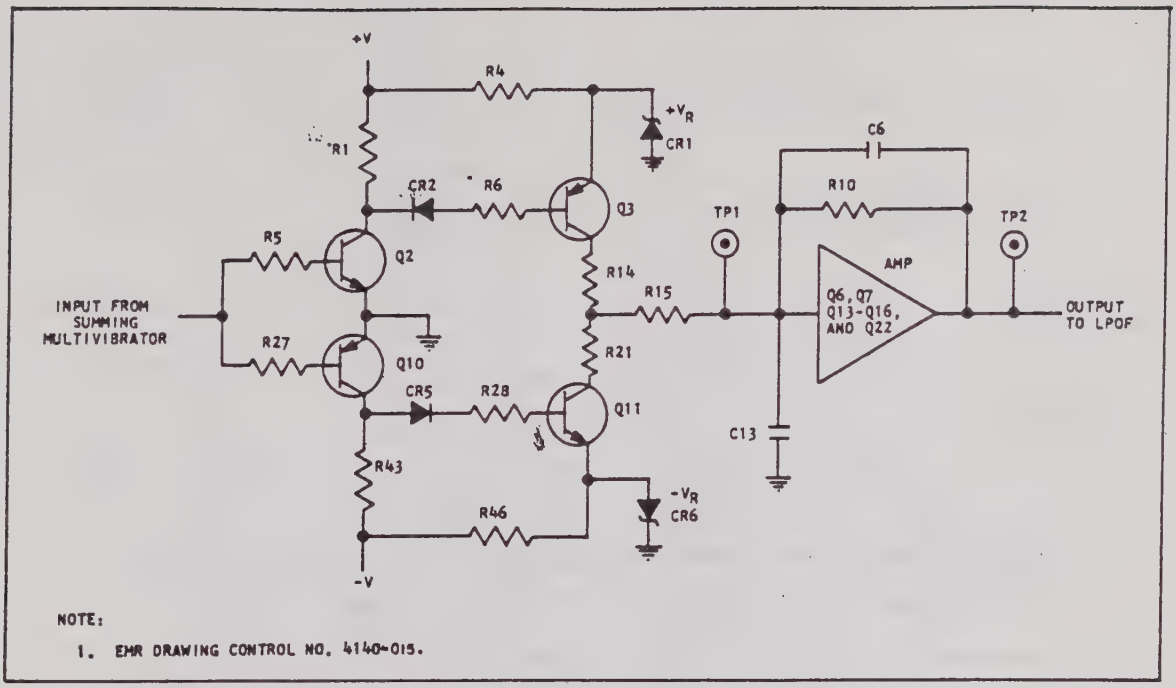

Figure 4-6. Voltage Switch Circuit, Simplified Schematic Diagram

The square-wave output from the first stage of the Voltage Switch is applied through resistors R16 and R22 and capacitors C29/C30 to ground. The charge and discharge of the R/C circuit produces a DC level, proportional to the square wave signal, which is applied to a comparator (transistors Q23, Q25, Q26, and CR17). A reference voltage ($+V_R$) is preset at the comparator input by transistors Q29 and Q30 (connected as zener diodes) and the tunable resistor connected to +15 volts. If the subcarrier input signal deviates beyond the prescribed channel bandedge, the DC voltage at the comparator input (base of Q25) increases above the $+V_R$ and the comparator is triggered. The comparator for this condition supplies a positive voltage to the base of Q35 in the Output Clamp activating clamp relay K5 and the Voltage Switch output is then connected to ground potential.

4.3.10 Low-Pass Output Filter

The Low-Pass Output Filter (LPOF) is either in a three-, five-, or seven-pole filter configuration designed to remove the subcarrier channel center frequency component from the Voltage Switch output and pass only the low-frequency intelligence data contained in the channel. The number of filter poles is dependent upon the particular discriminator configuration (refer to Section 1, paragraph 1.1). The three-pole filter provides an 18 Db/octave rolloff, the five-pole filter provides a 30 Db/octave rolloff, and the seven-pole filter provides a 42 Db/octave rolloff. The first LPOF pole is a single-pole circuit contained on the LPOF (single pole) printed-circuit card in the A2J11 card-tray location. The remaining LPOF poles are contained on LPOF (pole pair) printed-circuit cards in the A2J12, A2J13, and A2J14 card-tray locations.

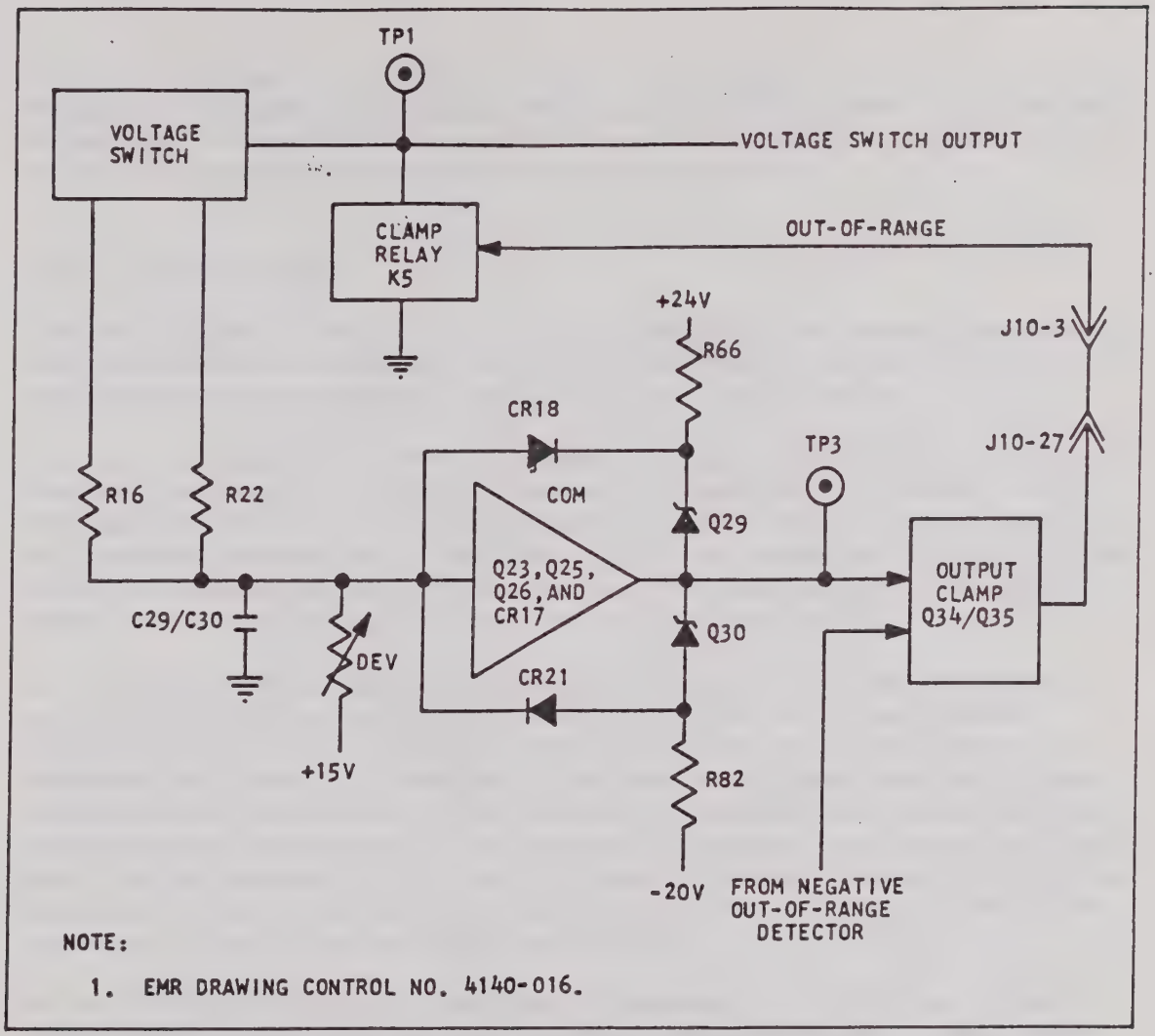

Figure 4-7. Positive Out-of-Range Detector Simplified Schematic Diagram

For discriminators containing a three-pole LPOF, the single pole printed-circuit card A2J11 and the first pole pair printed-circuit card A2J12 is installed in the unit. The remaining pole pairs are bypassed. For discriminators containing a five-pole LPOF, the single-pole printed-circuit card A2J11, first pole-pair printed circuit card A2J12, and the second pole-pair printed-circuit card A2J12 is installed in the unit. The third pole-pair printed-circuit card A2J14 is bypassed. For a seven-pole LPOF, the single-pole printed-circuit card A2J11 and all three pole-pair printed-circuit cards A2J12, A2J13, and A2J14 are installed.

As shown in Figure 4-2, the voltage switch output is routed to the single-pole section of the LPOF. The input is then separated into a high-frequency path and a low-frequency (DC) path. The high-frequency component is applied through the high frequency path and is attenuated in the pole sections of the LPOF passing only the low-frequency intelligence data in the subcarrier channel to the Output card A2J15. The low-frequency (DC) component is applied through resistor R1, filtered by capacitors C1/C2, and applied to the Output card A2J15.

Data cutoff frequencies and filter response characteristics are determined by components selected by energizing relays on the LPOF printed-circuit cards. These relays are controlled by control lines from front-panel controls or control lines from the rear-panel remote connector A3J5.

4.3.11 Output Circuits

The Output circuits consist of two isolation amplifiers, a summing amplifier, and an output power amplifier. Components of these circuits are contained on the Output printed-circuit card in the A2J12 card-tray location.

The two outputs from the LPOF are applied through isolation amplifiers and are summed in a summing amplifier, producing a composite data signal. The isolation amplifiers also set the discriminator deviation sensitivity by controlling the amount of feedback to the amplifier input. The tunable components in these feedback loops are selected by control lines from the front-panel DEVIATION switch or by control lines from the rear-panel remote connector A3J5.

The summing amplifier output (composite data signal) is applied to the front-panel % BANDEDGE meter and BANDEDGE volts control. The % BANDEDGE meter displays a relative indication of the amount and direction of the subcarrier deviation. The BANDEDGE volts control is used to adjust the input voltage to a power amplifier circuit at the discriminator data output. The discriminator data output voltage, representing a bandedge of the subcarrier signal input, may be adjusted to any value up to plus and minus 10 volts. The discriminator data output is routed from the power amplifier circuit to the rear-panel connector A3J1 and to a front-panel test jack TP3.

Current limiting in the power amplifier is provided by + LIMIT and – LIMIT source voltage inputs from the discriminator power supply A4. These inputs provide the source voltage (+18 and –18 volts) for operation of the power amplifier circuit. The maximum current available at the power amplifier output is 225 milliamperes and, as long as this maximum is not exceeded, the circuit will operate in a normal manner. However, should the current required at the data output exceed 225 milliamperes, the source voltage inputs will drop to a level such that the data output current does not exceed the maximum capability. If the data output is shorted to ground, the source voltage input drops to a zero-volt level, thereby preventing damage to the output power amplifier.

4.3.12 Balance Circuits

The Balance circuit provides a reference input (+15 REF) to the Detector flip-flop reset circuits. This input controls the time at which the Detector flip-flops are reset thereby controlling the pulse duration of the flip-flop outputs. (Refer to paragraph 4.3.6 for a description of the Detector circuits.) Components of the Balance circuits are contained on the TSC and Limiter printed-circuit cards in the A2J4 and A2J6 card-tray locations.

The Balance circuits consist of a balance amplifier circuit, a series regulator circuit, and a temperature compensation circuit. The balance amplifier circuit, consisting of transistors Q18 through Q26, is controlled by the front-panel BALANCE control in the feedback loop to provide a reference voltage output. This output is applied to a series regulator (transistors Q13, Q14, Q16, and Q17, and zener diode CR8) which provides a stable +15 REF output to the Detector circuits.

The temperature compensation (TC) circuit (transistors Q9 and Q12, and diodes CR1, CR2, and CR3) generates a source voltage for the second input of the balance amplifier. The TC source voltage controls the balance amplifier to compensate for drift caused by environmental temperature changes.

When the discriminator is operating in the remote mode of operation, an external balance input (EXT BAL IN) is applied from the rear panel remote connector A3J5 to the TC circuit. This input shunts the tunable resistor CFR to control the TC source voltage output. This arrangement provides a means of balancing the discriminator Detector circuits from a remote location.

4.3.13 Tape-Speed Compensation Circuit (TSC)

The TSC circuit, provided in discriminators containing the TSC function, accepts an external TSC input from a reference discriminator and provides an output signal controlling the discriminator Detector circuit outputs to compensate for tape-speed variations. This circuit operates in conjunction with the Balance circuit (paragraph 4.3.12) to modulate the +15 REF input to the Detector circuits. Components of the TSC circuit are contained on the TSC printed-circuit card in the A2J4 card-tray location.

The TSC input from the external reference discriminator is applied through rear-panel connector A3J2 to a precision delay network. This network, consisting of a main amplifier and tunable components in the feedback loops, delays the TSC input an amount equal to the subcarrier signal delay incurred in the discriminator BPIF. The delay network output (TSC OUT) is applied to the Balance amplifier in the Balance circuit again modulating the +15 REF output to the Detector.

The tunable components in the TSC delay network are selected by relays energized by control lines from front-panel controls or remote inputs from the rear-panel remote connector A3J5.

4.3.14 Power Supply and Regulator Circuits

The Power Supply and Regulator circuits provide all DC power voltages for discriminator operation. These circuits are contained on the Power Supply assembly A4 and Regulator printed-circuit card in the A2J16 card-tray location.

As shown in Figure 4-8, the primary power is applied from rear-panel connector A3J6 through fuse A3F1 to the front-panel POWER switch A1S13. This switch controls application of primary power to the rear-panel blower, B1, and Power Supply transformer T1. Three secondary windings of T1 are connected to full-wave diode rectifier assemblies CR1, CR2, and CR3 which rectify the AC power providing unregulated DC voltages to discriminator regulator circuits and front-panel displays. Diode rectifier CR1 supplies unregulated -20 volts to the -20-volt regulator circuit on the Regulator printed-circuit card, A2J16, and to the - LIMIT circuit, A4TB1Q1, A4TB1CR1, and A4TB1CR2. Diode rectifier CR2 supplies unregulated +24 volts to the +24-volt regulator and +15-volt regulator circuits on the Regulator printed-circuit card, A2J16, and to the + LIMIT circuit A4TB1Q2, A4TB1CR3, and A4TB1CR4. Diode rectifier CR3 supplies unregulated +12 volts to the +12-volt regulator on the Regulator printed-circuit card, A2J16, and to the front-panel displays. Since the operation of the regulator circuits and the + and - LIMIT circuits are similar, only the circuits associated with diode rectifier CR1 are discussed.

4.3.14.1 -20-Volt Regulator Circuit

The -20-Volt Regulator Circuit is shown schematically in Figure 4-9. This circuit consists primarily of a constant current generator, a differential comparison amplifier, a Darlington-connected series regulator, and a current limiter.

The constant current generator, transistor Q24, zener diode CR6, and resistor R46 operate from the unregulated -20-volt input from diode rectifier CR1 providing a constant current source for the differential comparison amplifier and series regulator. This configuration in effect increases the performance of the regulator by maintaining a constant current flow regardless of the fluctuations in the unregulated input voltage.

Regulation at the -20-volt output is accomplished by comparing a sample of the output potential with a voltage reference obtained from zener diode CR10. The differential comparison amplifier Q31/Q32/Q33, senses the magnitude and direction of the voltage difference and applies an inverted signal to the Darlington connected series regulator Q21 and A4Q1. This out-of-phase signal increases or decreases the biasing of A4Q1 to compensate for the voltage fluctuations at the -20-volt regulated output.

Current supplied to the load is limited by current limiting transistor Q30. This transistor is biased to the off state during normal operation, however, if excessive current is drawn through resistor A4TB1R1, Q30 becomes forward biased. In this condition, the collector potential of Q30 increases toward a zero-volt level which decreases the base potential of transistor Q21. The emitter potential of Q21 increases toward a zero-volt level, back biasing series regulator transistor A4Q1 and the regulated -20-volt output drops to a zero-volt level.

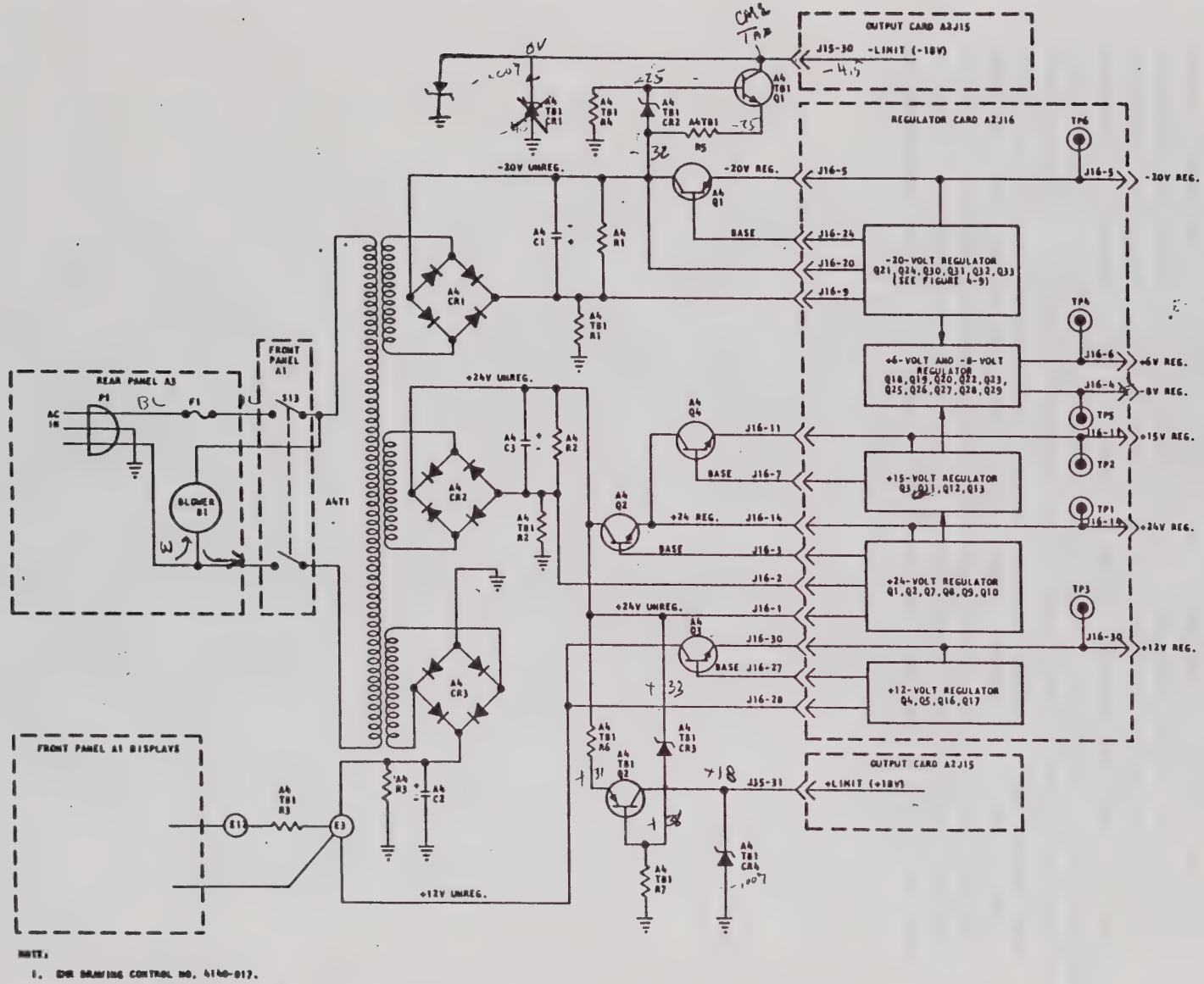

NOTE:

1. EHR DRAWING CONTROL NO. 4140-017.

Figure 4-8. Power Supply and Regulator Circuits, Simplified Schematic

4.3.14.2 - LIMIT Circuit

The - LIMIT circuit, shown in Figure 4-8, uses the unregulated -20-volt output to establish a - LIMIT source voltage (-18 volts) output to the Output card, A2J15. (Refer to paragraph 4.3.11.) The zener diode, A4TB1CR2, connected between the base of transistor A4TB1Q1 and the unregulated -20-volt source, establishes the base biasing for series regulator A4TB1Q1. Zener diode A4TB1CR1 clamps the output at a -18-volt level. This circuit is capable of supplying up to 225 milliamperes into the output load and shall maintain regulation as long as this maximum current is not exceeded. If the output load requires additional current, the voltage across resistor A4TB1R5 increases toward the potential at the A4TB1Q1 base reference and the output voltage (- LIMIT) decreases to a level such that the effective current does not exceed the maximum capability. Thus, if the output is grounded, A4TB1Q1 is back biased to the off condition and no current is supplied to the load.

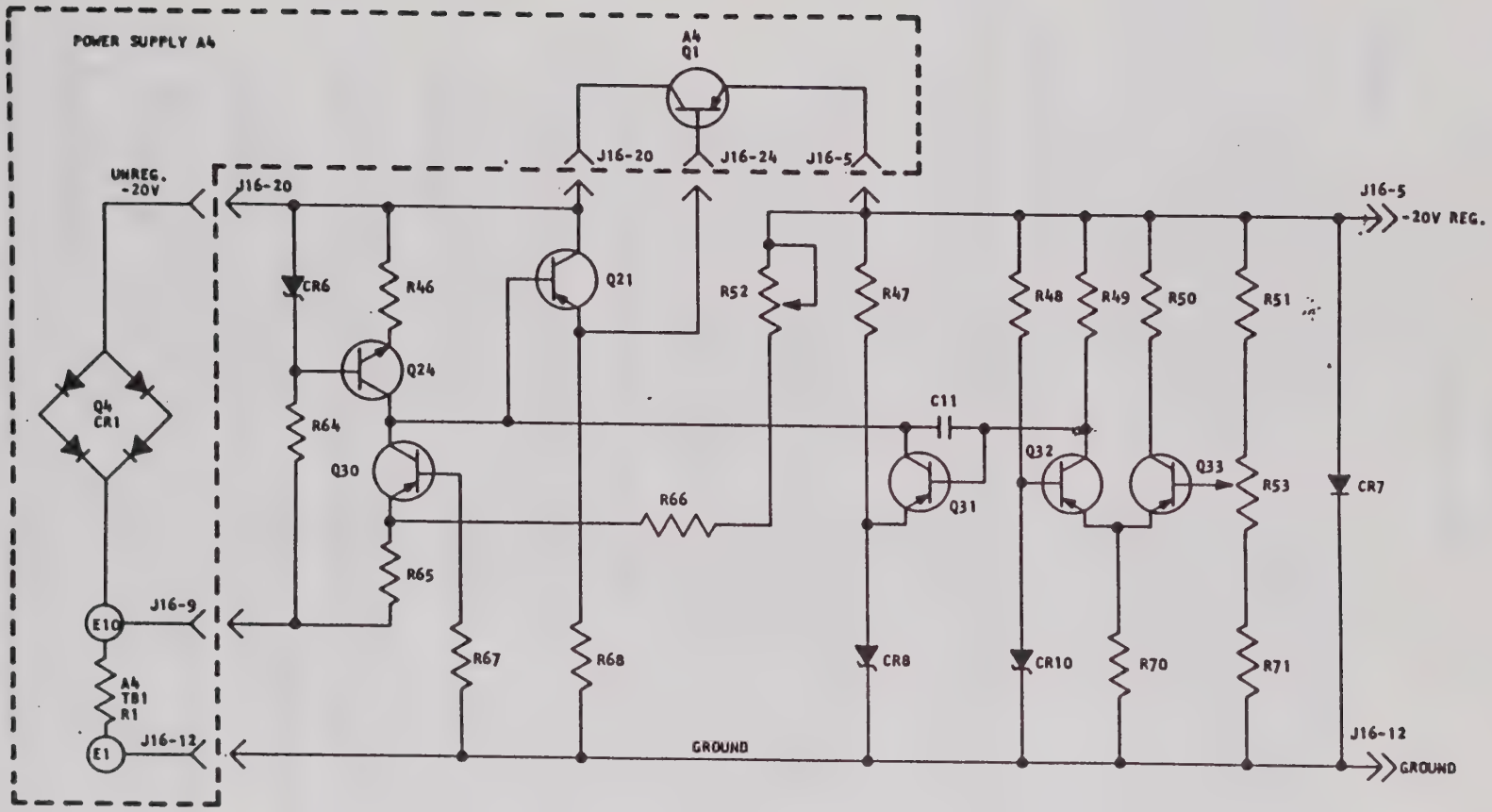

NOTE:

1. EMR DRAWING CONTROL NO. 4140-018.

Figure 4-9. -20-Volt Regulator Circuit, Schematic Diagram

SECTION 5

MAINTENANCE

5.1 GENERAL

This section contains information to aid in troubleshooting and maintaining the Model 4140 Programmable Tunable Discriminator. This information is intended to be used in conjunction with the theory of operation, contained in Section 4, so that the maintenance may be performed with maximum efficiency. Included in the maintenance information are troubleshooting guides (paragraph 5.2), test and adjustment procedures (paragraph 5.3), wiring (paragraph 5.4), and assembly and schematic diagrams for discriminator assemblies (Figures 5-1 through 5-32).

5.2 TROUBLESHOOTING

In the event an abnormal condition is detected in discriminator operation, the following general method of isolating and repairing the trouble is recommended:

NOTE

The TSC, Limiter, Detector, and Voltage Switch cards are factory-matched sets and must be used together. Do not replace or exchange any of these cards without including the entire set. If factory repairs are necessary, return all four cards. Also, the two BPIF cards are factory matched and should be used together for optimum performance.

a. Perform visual inspection (paragraph 5.2.1).

b. Check discriminator waveforms to isolate the malfunction to a functional circuit (paragraph 5.2.2).

c. Check transistor voltages in the malfunctioning circuit (paragraph 5.2.3).

d. When defective component is located, refer to Section 6, Parts Lists, for replacement component description.

e. Recheck all discriminator waveforms to ascertain that discriminator is operating properly (paragraph 5.2.2).

f. Make necessary readjustments in the affected circuit (paragraph 5.3).

5.2.1 Visual Inspection

The discriminator should be subjected to a regular inspection program similar to that recommended for other types of electronic equipment. The following inspection should be performed periodically as a means of preventive maintenance or, if a malfunction occurs, to aid in isolating the trouble.

a. Inspect wiring for loose or broken connections.

b. Inspect front- and rear-panel connectors, switches, and controls for signs of damage.

c. Inspect printed-circuit cards for mechanical damage or component discoloration.

d. Inspect card tray, card guides, and card-mating connectors for signs of damage.

5.2.2 Circuit Waveforms

The circuit waveforms are designed to isolate a malfunction to a functional circuit in the discriminator. Functional circuits of the discriminator are located on printed-circuit cards in the card-tray assembly, A2, in the center section of the unit. Access to this assembly is obtained by extending the unit from the mounting rack, on the side-mounted slides, and removing the top cover. The printed-circuit-card locations within the card tray are illustrated in Figure 5-1. Access to signals in the discriminator circuits is provided by test points located on the top surfaces of the printed-circuit cards. The circuit locations, test-point designations, and waveforms are provided in Table 5-1.

5.2.3 Transistor Voltage Measurements

Transistor voltage measurements for the printed-circuit cards are contained in Tables 5-2 through 5-12. It should be noted that the voltages are typical for circuits during normal operation and that the actual voltages may differ slightly from those provided. However, in a malfunctioning circuit, the actual readings will differ significantly from the typical voltages. Access to transistors on the printed-circuit cards is obtained by extending the cards from the card tray using the extender card in card-tray-location J17.

When troubleshooting discriminator circuits, reference should be made to the transistor voltage table, component location diagram, and schematic diagram for the particular printed-circuit card.

5.3 CHECKOUT AND ADJUSTMENT

This paragraph contains a procedure for the checkout and adjustment of the discriminator after a defective component is replaced. The procedure may also be used to ensure the operational readiness of the discriminator. The indications provided in the procedure are typical for all discriminators and the actual indications will vary between units. Therefore, the indications should not be interpreted as discriminator specifications. For discriminator specifications, refer to Section 2 of this manual. If an acceptance test is required, the acceptance test procedure supplied as a separate document should be used.

5.3.1 Test Equipment Required

The following test equipment or equivalent is recommended for the tests and adjustments outlined in this section.

a. DC Voltmeter: John Fluke 801 or equivalent

b. Power Decade: Clarostat 240-C or equivalent

c. Oscilloscope: Tektronix 545A or equivalent

d. Signal Generator: Hewlett Packard 200 CD or equivalent

e. RMS Meter: Hewlett Packard 400D or equivalent

5.3.2 Regulator Circuits (Ref. Figures 5-28 and 5-29)

a. Apply primary power to the Power Supply and Regulator circuits.

b. Check and adjust the +24-volt regulator as follows:

1. Connect a DC voltmeter between J16TP1 and ground.

2. Adjust potentiometer J16R16 to obtain a +24-volt ±10-millivolt indication. 23.645

c. Check and adjust the +15-volt regulator as follows:

1. Connect a DC voltmeter between J16TP2 and ground.

2. Adjust potentiometer J16R20 to obtain a +15-volt ±10-millivolt indication. +15.03

d. Check and adjust the -20-volt regulator as follows:

1. Connect a DC voltmeter between J16TP6 and ground.

2. Adjust potentiometer J16R53 to obtain a -20-volt ±10-millivolt indication.

e. Check the +12-volt regulator as follows:

1. Connect a DC voltmeter between J16TP3 and ground.

2. Observe that the voltage is between +10.8 and +13.2 volts. +12.683

f. Check the +6-volt regulator as follows:

1. Connect a DC voltmeter between J16TP4 and ground.

2. Observe that the voltage is between +5.4 +6.129 and +6.6 volts.

g. Check the −8-volt regulator as follows:

1. Connect a DC voltmeter between J16TP5 and ground.

2. Observe that the voltage is between −7.2 and −8.8 volts. −7.953

h. Depress the front-panel POWER switch, removing DC power from printed-circuit cards.

i. Remove all card-tray printed-circuit cards except the Regulator card A2J16.

j. Depress the front-panel POWER switch applying power to Regulator card.

k. Using a power decade, connect a 30-ohm load between J16TP1 and ground. Monitor J16TP1 with a DC voltmeter.

l. Rotate potentiometer J16R14 until the voltage at J16TP1 decreases. Reverse the rotation of J16R14 until the +24 volts is restored.

m. Using a power decade, connect a 25-ohm load between J16TP6 and ground. Monitor J16TP6 with a DC voltmeter.

n. Rotate potentiometer J16R52 until the voltage at J16TP6 decreases. Reverse the rotation of J16R52 until the −20-volt level is restored.

o. Depress the front-panel POWER switch, removing DC power from Regulator card.

p. Insert all printed-circuit cards into their proper card-tray location. (Refer to Table 1-2.)

5.3.3 Bandpass Input Filter

a. Using an external signal generator and an RMS meter, apply an unmodulated subcarrier signal of 1 volt RMS at the rear-panel INPUT connector A3J3.

b. Set discriminator front-panel controls to accept the selected subcarrier signal input.

c. Using an RMS meter, observe the BPIF output (front-panel BP OUT test jack) for a 1-volt RMS indication (nominal value).

d. On the external signal generator, deviate the frequency ±7.5% from bandcenter.

OK

e. Position the discriminator front-panel DEVIATION switch to ±7.5%.

f. Observe the RMS meter for a nominal value of −3 Db ±1 Db at the BPIF output (front-panel BP OUT test jack).

g. Check the remaining positions of the discriminator front-panel DEVIATION switch in a similar manner. For all positions, the BPIF should have unity gain (nominally) from input to output at center frequency and a nominal indication of −3 Db ±1 Db at the bandedges.

5.3.4 Limiter and Trigger Circuit (Ref. Figures 5-12 and 5-13)

a. Using an external signal generator and an RMS meter, apply an unmodulated subcarrier signal of 1 volt RMS at the rear-panel INPUT connector A3J3.

b. Set discriminator front-panel controls to accept the selected subcarrier signal input.

BAD

c. Using an oscilloscope, observe the Trigger output (J6TP2) for a 6-volt peak-to-peak squarewave.

d. Vary the subcarrier input amplitude between the minimum input amplitude level and the maximum input amplitude level and observe that the Trigger output (J6TP2) does not change. (Refer to Section 2 for input amplitude level specifications.)

$f_0 < 300$ KHz
10 mv - 5 v RMS

5.3.5 Subcarrier Amplitude Meter Circuit

a. Using an external signal generator and an RMS meter, apply an unmodulated subcarrier signal of 50 millivolts RMS at the rear-panel INPUT connector A3J3.

b. Set discriminator front-panel controls to accept the selected subcarrier signal input.

c. Observe the discriminator front-panel INPUT meter for a 50-millivolt indication. OK

d. Increase the amplitude of the subcarrier signal input to 5 volts RMS and observe the INPUT meter for a 5-volt indication.

5.3.6 Zero-Signal Detector (Ref. Figures 5-12 and 5-13)

a. Using an external signal generator and an RMS meter, apply an unmodulated subcarrier signal of the minimum input amplitude level at the rear-panel INPUT connector A3J3. (Refer to Section 2 for the minimum input amplitude specification.)

b. Set the discriminator front-panel controls to accept the selected subcarrier signal input.

c. Rotate potentiometer J6R72 until the front-panel SIGNAL LOSS lamp illuminates. Reverse the rotation of J6R72 until the SIGNAL LOSS lamp extinguishes. This adjustment sets the signal loss level.

5.3.7 Detector Circuit (Ref. Figures 5-14 and 5-15)

a. Using an external signal generator and an RMS meter, apply an unmodulated 10 KHz subcarrier signal of 1 volt RMS to the rear-panel INPUT connector A3J3.

b. Set the discriminator front-panel controls to accept the 10-KHz subcarrier signal input.

c. Using an oscilloscope, observe the waveforms at J8TP1 and J8TP2. Waveforms should be as illustrated in Table 5-1, Circuit Waveforms. OK

d. Deviate the subcarrier signal input to a bandedge of the subcarrier channel.

e. Observe that the pulse duration of the positive excursions vary with a change in frequency and that the pulse duration of the negative excursion does not change.

5.3.8 Voltage Switch Circuit (Ref. Figures 5-16 and 5-17)

a. Using an external signal generator and an RMS meter, apply an unmodulated 10-KHz subcarrier signal of 1 volt RMS to the rear-panel INPUT connector A3J3.

b. Set the discriminator front-panel controls to accept the 10-KHz subcarrier signal input.

c. Using an oscilloscope, observe the waveform at J10TP1. Waveform should be as illustrated in Table 5-1, Circuit Waveforms.

d. Remove the subcarrier signal input to rear-panel INPUT connector A3J3 and observe that the front-panel SIGNAL LOSS and OUT OF RANGE indicators are illuminated.

e. Using a DC voltmeter, monitor J10TP2 and adjust potentiometer J10R29 for a 0-volt indication.

5.3.9 Out-of-Range Detector (Ref. Figures 5-16 and 5-17)

a. Using an external signal generator and an RMS meter, apply an unmodulated subcarrier signal of 1 volt RMS to the rear-panel INPUT connector A3J3.

b. Set the discriminator front-panel controls to accept the selected subcarrier signal input.

c. Using a DC voltmeter, measure the voltages at J10TP3 and J10TP4. These are as follows:

J10TP3-- -5 volts (approximate)

J10TP4-- +5 volts (approximate)

d. Deviate the subcarrier signal input beyond the upper bandedge of the selected subcarrier channel and observe that the front-panel OUT OF RANGE indicator illuminates.

e. Measure the voltage at J10TP4; this should be approximately -5 volts.

f. Deviate the subcarrier signal below the lower bandedge of the selected subcarrier channel and observe that the front-panel OUT OF RANGE indicator illuminates.

g. Measure the voltage at J10TP3; this should be approximately +5 volts.

5.3.10 Low-Pass Output Filter (Ref. Figures 5-18 and 5-19)

a. Using an external signal generator and an RMS meter, apply an unmodulated 10-KHz subcarrier signal of 1 volt RMS to the rear-panel INPUT connector A3J3.

b. Set discriminator front-panel controls to accept the 10-KHz subcarrier signal input. Set data cutoff controls for a modulation index (MI) of 5 (150 Hz).

c. Using an oscilloscope, observe the waveform at J11TP1. Waveform should be as illustrated in Table 5-1, Circuit Waveforms.

d. Deviate the subcarrier signal input to a bandedge of the subcarrier channel.

e. The basic triangular waveform should not change but the DC offset should change approximately ±0.7 volt.

f. Check the other subcarrier channel bandedge in a similar manner.

5.3.11 Output Circuits (Ref. Figures 5-26 and 5-27)

a. Using the card extender, extend the Output card, J15, from the card tray.

b. Remove the subcarrier signal input from the rear-panel INPUT connector A3J3 and observe that the front-panel SIGNAL LOSS and OUT OF RANGE indicators are illuminated.

c. Adjust potentiometer J15R91 as follows:

1. Rotate the front-panel BALANCE control to center the % BANDEDGE meter.

2. Change the switch position of the rear-panel DEV SENSE switch S1 from (+) to (−) to (+), etc. and observe the % BANDEDGE meter for a change in indication. If a change occurs, adjust J15R91 until this change is minimum. 12

d. Install a clip-lead between J15P11 and ground. Using a DC voltmeter, monitor J15E4 and adjust potentiometer J15R65 for a 0-volt indication. −.0V

e. Connect a DC voltmeter across J15 pins 5 and 12 and adjust potentiometer J15R114 for a 0-volt indication. +15.2V

f. Remove the clip-lead between J15P11 and ground and reinstall between J15P12 and ground.

g. Using a DC voltmeter, monitor test point J15TP2 and adjust potentiometer J15R37 for a 0-volt indication.

h. Remove the clip-lead between J15P12 and ground.

i. Using a DC voltmeter, monitor the front-panel DATA OUT test jack and adjust potentiometer J15R78 for a 0-volt indication.

j. Using an external signal generator and an RMS meter, apply an unmodulated subcarrier signal input of 1 volt RMS to rear-panel INPUT connector A3J3.

k. Set discriminator front-panel controls to accept the selected subcarrier channel.

l. Using a DC voltmeter, monitor the front-panel DATA OUT test jack.

m. Adjust front-panel BALANCE control for a 0-volt indication on the DC voltmeter.

n. Deviate the subcarrier signal input to a bandedge of the selected subcarrier channel.

o. Rotate the front-panel BANDEDGE VOLTS control for a ±10-volt indication at the front-panel DATA OUT test jack.

p. Change the position of the rear-panel DEV SENSE switch A3S1 and observe that the polarity of the output voltage changes.

q. Deviate the subcarrier signal input to the other bandedge of the selected subcarrier channel and observe that the output voltage is ±10 volts.

5.3.12 Tape-Speed Compensation (TSC) Circuit

For discriminators containing the TSC function, the TSC circuit including the TSC delay and gain adjust potentiometers are located on the TSC card in the A2J4 card tray location. For a delay and gain adjustment procedure, refer to Section 3 of this manual.

5.4 WIRING

The discriminator wiring information is contained in the front-panel schematic diagram, Figure 5-3, and interconnection wire list, Table 5-13. Additional wiring information is contained on the detailed block diagram, Figure 4-2, which illustrates the prime signal flow and connections within the discriminator circuits.

Table 5-1. Circuit Waveforms, Model 4140
Programmable Tunable Discriminator

CIRCUIT LOCATION	INPUT	WAVEFORM	OSCILLOSCOPE	
			VERT.	HORIZ.
Input Card A2J2TP1	F_c-10 KHz (Unmod) Input Amplitude-1V RMS	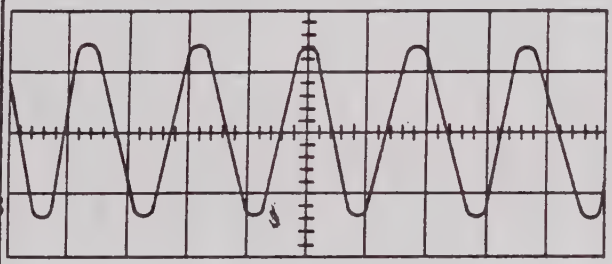	1V/Cm	50 μsec/ Cm
BPIF Card #1 A2J1TP2	F_c-10 KHz (Unmod)	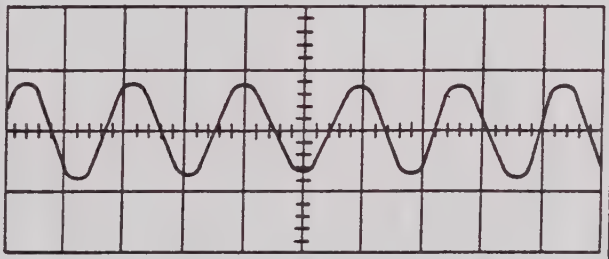	1V/Cm	50 μsec/ Cm
BPIF Card #1 A2J1TP1	F_c-10 KHz (Unmod)	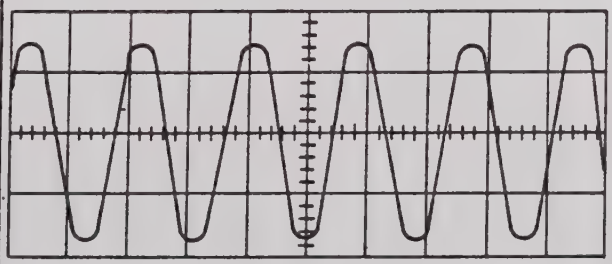	1V/Cm	50 μsec/ Cm
BPIF Card #2 A2J3TP2	F_c-10 KHz (Unmod)	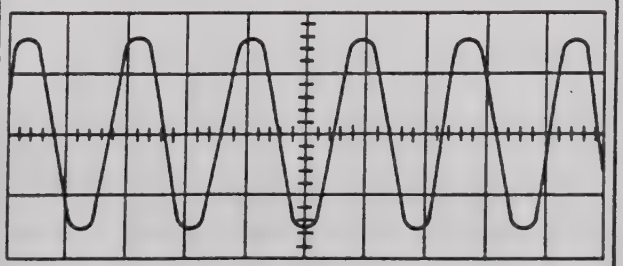	1V/Cm	50 μsec/ Cm

Table 5-1 (Cont'd.). Circuit Waveforms, Model 4140
Programmable Tunable Discriminator

CIRCUIT LOCATION	INPUT	WAVEFORM	OSCILLOSCOPE	
			VERT.	HORIZ.
BPIF Card #2 A2J3TP1	F_c-10 KHz (Unmod)	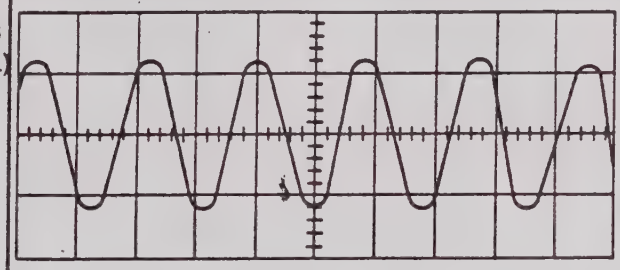	1V/Cm	50 μsec/ Cm
Limiter Card A2J6TP1	F_c-10 KHz (Unmod)	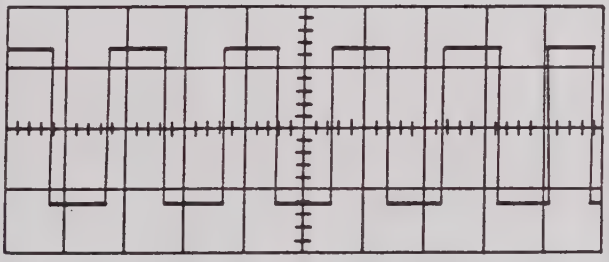	2V/Cm	50 μsec/ Cm
Limiter Card A2J6TP2	F_c-10 KHz (Unmod)	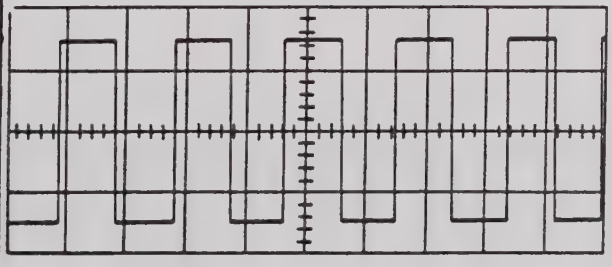	2V/Cm	50 μsec/ Cm
Detector Card A2J8TP1	F_c-10 KHz (Unmod)	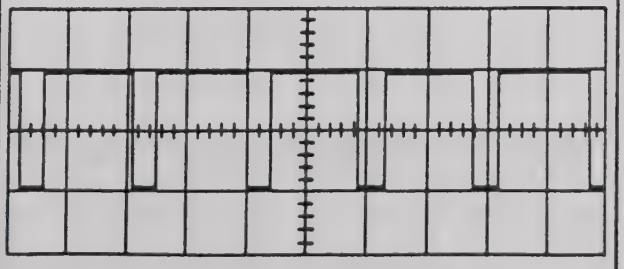	5V/Cm	50 μsec/ Cm

Table 5-1 (Cont'd.). Circuit Waveforms, Model 4140
Programmable Tunable Discriminator

CIRCUIT LOCATION	INPUT	WAVEFORM	OSCILLOSCOPE	
			VERT.	HORIZ.
Detector Card A2J8TP2	F_c-10 KHz (Unmod)	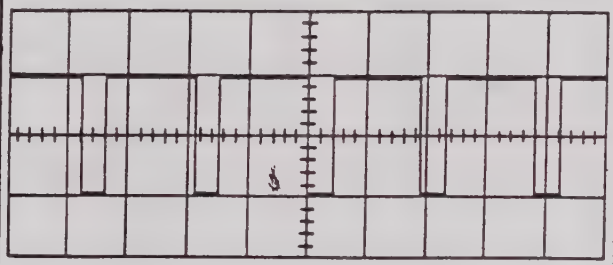	5V/Cm	50 µsec/ Cm
Voltage Switch Card A2J10TP2	F_c-10 KHz (Unmod)	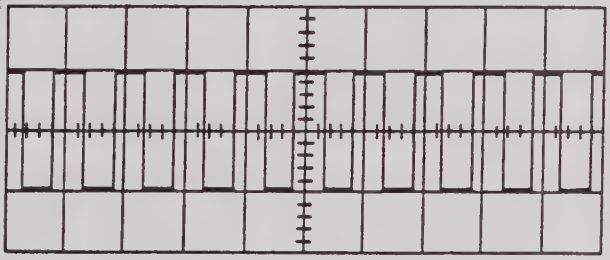	10V/Cm	50 µsec/ Cm
Voltage Switch Card A2J10TP1	F_c-10 KHz (Unmod)	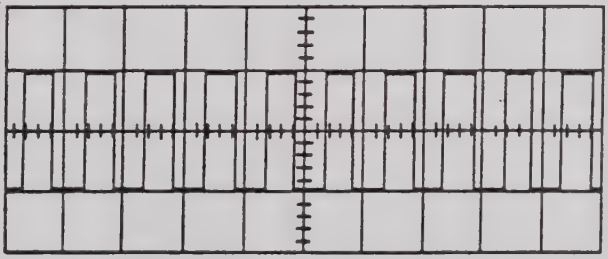	5 V/Cm	50 µsec/ Cm
LPOF (SP) Card A2J11TP1	F_c-10 KHz (Unmod)	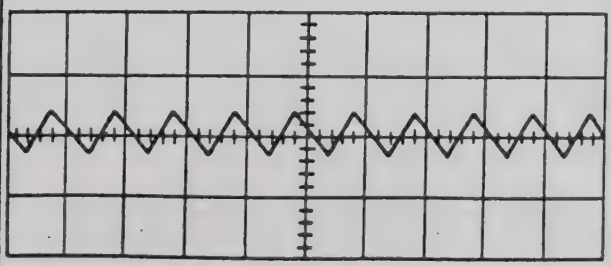	0.5V/Cm	50 µsec/ Cm

Table 5-1 (Cont'd.). Circuit Waveforms, Model 4140
Programmable Tunable Discriminator

CIRCUIT LOCATION	INPUT	WAVEFORM	OSCILLOSCOPE	
			VERT.	HORIZ.
LPOF (SP) Card A2J11TP1	F_c=10 KHz (Mod. ±7.5% with 100 Hz data signal)	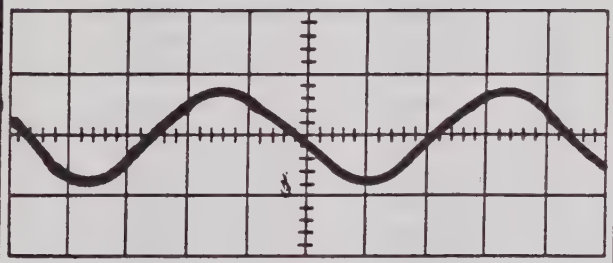	1V/Cm	2 milli-sec/Cm
Output Card A2J15TP1	F_c=10 KHz (Mod. ±7.5% with 100 Hz data signal)	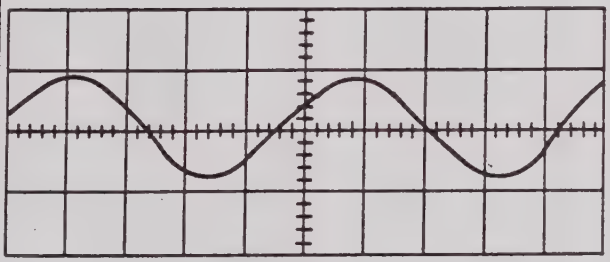	2V/Cm	2 milli-sec/Cm
Output Card A2J15TP2	F_c=10 KHz (Mod. ±7.5% with 100 Hz data signal)	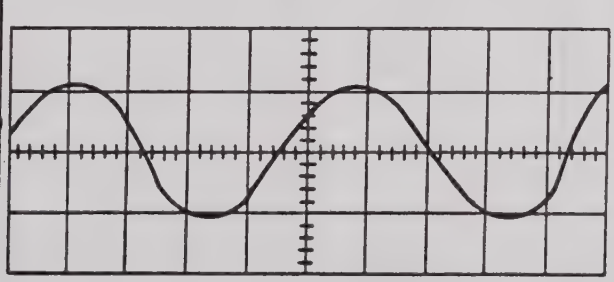	2V/Cm	2 milli-sec/Cm

Table 5-2. Transistor Voltages, BPIF #1 Printed Circuit Card (A2J1)

TRANSISTOR	E	B	C
Q1	-1.24	-0.63	+14.4
Q2	-1.80	-1.25	+11.4
Q3	+14.6	+14.0	-0.48
Q4	+11.4	+10.8	-14.0
Q5	-18.2	-17.5	+15.2
Q6	-16.0	-15.5	-2.05
Q7	-0.52	-1.24	-18.1
Q8	-1.32	-2.02	-20.0
Q9	-0.78	-0.15	+15.0
Q10	-0.78	-0.20	+11.6
Q11	+11.6	+11.0	-0.10
Q12	-0.65	-0.10	+14.2
Q13	-14.4	-15.0	-0.78
Q14	-15.2	-14.6	-1.25
Q15	-0.70	-1.25	-19.8

NOTES:

1. Voltages taken with multiplex input grounded.
2. Switch settings as follows:
   F_c - 100 KHz F_D - 7.5% Data cutoff 1.5 KHz

Table 5-3. Transistor Voltages, Input Printed-Circuit Card (A2J2)

TRANSISTOR	E	B	C
Q1	-0.82	-0.18	+14.5
Q2	-0.70	-0.08	+14.5
Q3	+0.55	+1.16	+8.75
Q4	-0.67	-0.08	+23.2
Q5	-1.47	-0.84	+11.5
Q6	-1.37	-0.72	+11.6
Q7	-0.07	+0.55	+23.0
Q8	+11.5	+10.9	-13.9
Q9	+11.6	+10.9	-14.1
Q10	-15.5	-14.8	-0.66
Q11	-14.6	-13.9	-1.46
Q12	-14.6	-14.0	-1.36
Q13	-1.26	-0.65	+14.5
Q14	-1.70	-1.25	+14.6
Q15	+14.7	+14.0	+1.28
Q16	-0.16	+0.43	+14.5
Q17	-2.55	-1.85	+11.1
Q18	-16.8 -16.71	-15.8 -16.33	+14.0 -12.50
Q19	-0.83	-0.18	+11.6
Q20	+10.5	+11.0	+14.6
Q21	+1.28	+0.64	-16.8
Q22	+11.6	+11.0	-14.0
Q23	+0.60	-0.03	-20.0
Q24	-14.6	-14.0	-0.83
Q25	0.00	+0.7	+0.10
Q26	0.00	+0.06	+0.45
Q27	0.00	+0.70	+0.10

NOTES:

1. Voltages taken with multiplex input grounded.
2. Switch settings as follows:

   F_C - 100 KHz F_D - 7.5% Data cutoff 1.5 KHz

Table 5-4. Transistor Voltages, BPIF #2 Printed-Circuit Card (A2J3)

TRANSISTOR	E	B	C
Q1	+0.66	+1.26	+14.5
Q2	0.00	+6.30	+11.5
Q3	+14.4	+13.8	+1.40
Q4	+11.5	+10.9	-14.0
Q5	-16.8	-16.0	+13.8
Q6	-14.6	-14.0	0.00
Q7	+1.40	+0.74	-16.8
Q8	+0.66	+0.04	-19.5
Q9	+0.78	+1.39	+14.6
Q10	+0.78	+1.40	+18.6
Q11	+18.6	+18.0	+4.15
Q12	+3.60	+4.15	+14.4
Q13	-15.0	-14.4	+0.78
Q14	-15.0	-14.4	+2.95
Q15	+3.50	+2.90	-19.0

NOTES:

1. Voltages taken with multiplex input grounded.
2. Switch settings as follows:

   F_C - 100 KHz F_D - 7.5% Data cutoff 1.5 KHz

Table 5-5. Transistor Voltages, TSC Printed-Circuit Card (A2J4)

TRANSISTOR	E	B	C
Q1	+20.5	+20.0	-0.62
Q2	+7.60	+8.20	+23.2
Q3	-0.60	-0.03	+20.0
Q4	+20.0	+19.2	+8.70
Q5	+7.5	+8.1	+23.0
Q6	-0.08	+0.54	+23.5
Q7	-14.4	-13.8	-0.60
Q8	-14.6	-14.0	+0.53
Q9	-5.7	-5.00	-3.10
Q10	+13.8	+13.1	-0.64
Q11	-0.64	-0.06	+13.1
Q12	-2.45	-3.15	-5.70
Q13	+7.80	+7.00	-0.64
Q14	-0.64	-0.08	+7.00

NOTES:

1. Voltages taken with multiplex input grounded.
2. Switch settings as follows:

   F_C - 100 KHz F_D - 7.5% Data cutoff 1.5 KHz

Table 5-6. Transistor Voltages, Limiter Printed-Circuit Card (A2J6)

TRANSISTOR	E	B	C
Q1	-0.71	-0.08	+13.2
Q2	-1.32	-0.71	+14.0
Q3	-0.71	-0.08	+13.9
Q4	-1.34	-0.71	+14.8
Q5	-0.72	-0.09	+13.8
Q6	-1.32	-0.72	+14.9
Q7	-0.75	-0.07	+7.4
Q8	-0.90	-0.75	+7.4
Q9	-0.90	-0.95	+8.6
Q10	-0.96	-0.25	+7.4
Q11	+6.80	+7.40	+14.0
Q12	+7.90	+8.60	+14.0
Q13	+20.0	+19.2	+15.2
Q14 (Left)	+2.5	+3.05	+15.5
Q14 (Right)	+2.5	+3.1	+14.4
Q16	+14.4	+15.0	+23.2
Q17	+15.0	+15.6	+23.0
Q18	+19.8	+19.0	+11.6
Q19	-0.60	-0.04	+10.0
Q20	+10.6	+9.8	-0.60
Q21	+13.4	+12.7	-0.60
Q22	-0.60	-0.03	+12.7
Q23	+11.0	+11.6	+23.2
Q24	+10.4	+11.0	+23.2
Q25	-14.0	-13.2	+3.70
Q26	+3.1	+3.7	+23.2
Q27	-1.30	-0.70	+14.8
Q28	0.00	-2.15	+18.5
Q29	+5.6	0.00	+1.10
Q30	+5.00	+5.60	+8.50
Q31	+5.00	+4.40	+23.2
Q32	-8.5	-11.0	+5.8
Q33	0.00	+0.76	+0.22
Q34	0.00	+0.76	+0.38

NOTES:

1. Voltages taken with multiplex input grounded.
2. Switch settings as follows:

   F_C - 100 KHz F_D - 7.5% Data cutoff 1.5 KHz

Table 5-7. Transistor Voltages, Detector Printed-Circuit Card (A2J8)

TRANSISTOR	E	B	C
Q1	-3.50	-2.80	+6.00
Q2	+3.70	+4.40	+6.00
Q3	0.00	-0.10	+0.60
Q4	-4.80	-4.40	-2.80
Q5	-4.80	-5.90	+4.40
Q6	+5.60	+0.65	+14.0
Q7	+5.60	+6.30	+8.40
Q8	-8.40	-8.40	-4.60
Q9	-8.40	-4.80	-4.80
Q11	-3.50	-2.80	+6.00
Q12	+3.70	+4.40	+6.00
Q13	0.00	-0.10	+0.60
Q14	-4.80	-4.40	-2.80
Q15	-4.80	-5.90	+4.40
Q16	+5.60	+0.65	+14.0
Q17	+5.60	+6.30	+8.40
Q18	-8.40	-8.40	-4.60
Q19	-8.40	-4.80	-4.80

NOTES:

1. Voltages taken with multiplex input grounded.
2. Switch settings as follows:
   F_C - 100 KHz F_D - 7.5% Data cutoff 1.5 KHz

Table 5-8. Transistor Voltages, Voltage Switch Printed-Circuit Card (A2J10)

TRANSISTOR	E	B	C
Q1	+8.40	+8.60	+13.4
Q2	0.00	-3.00	+8.60
Q3	+9.00	+11.7	-1.80
Q4	+6.00	+5.40	+2.20
Q5	+6.00	+5.60	-1.30
Q6 (A)	-0.62	-0.02	+16.00
Q6 (B)	-0.64	-0.02	+16.00
Q7	+15.2	+16.0	+22.5
Q8	-5.10	-4.80	+2.20
Q9	-5.10	-4.60	-1.30
Q10	0.00	+1.40	-4.10
Q11	-9.00	-9.60	-3.40
Q13	+15.5	+16.0	+23.0
Q14	+16.0	+15.2	0.00
Q15	+16.0	+15.2	+0.66
Q16	+0.07	+0.66	+23.0
Q17	-3.50	-4.10	-13.8
Q18	-8.50	-9.00	-4.80
Q19	-8.50	-9.00	-4.80
Q20	-8.40	-9.00	-4.80
Q21	-8.40	-9.00	-4.80
Q22	0.00	-0.62	-19.0
Q23	-0.88	-2.60	+23.0
Q24	+11.2	+11.8	+23.0
Q25	-0.40	+0.26	-0.26
Q26	-0.40	0.00	+14.3
Q27	-0.62	-0.02	+11.8
Q28	-0.60	-0.02	+14.3
Q29	+0.75	-5.20	-5.50
Q30	-5.20	-10.7	-7.00
Q31	+12.0	+6.20	+5.80
Q32	+6.20	+0.41	+0.02
Q33	0.00	+0.74	+0.13
Q34	0.00	-2.40	+1.22
Q35	0.00	-5.20	+1.22

NOTES:

1. Voltages taken with multiplex input grounded.
2. Switch settings as follows:

   F_C - 100 KHz F_D - 7.5% Data cutoff 1.5 KHz

Table 5-9. Transistor Voltages, LPOF Single Pole Printed-Circuit Card (A2J11)

TRANSISTOR	E	B	C
Q1	-0.60	0.00	+14.6
Q2	-1.25	-0.61	+11.6
Q3	-15.2	-14.8	-1.25
Q4	+11.6	+11.0	-14.8

NOTES:

1. Voltages taken with multiplex input grounded.
2. Switch settings as follows:

   F_c - 100 KHz F_D - 7.5% Data cutoff 1.5 KHz

Table 5-10. Transistor Voltages, LPOF Pole Pair Printed-Circuit Card (A2J12, J13, and J14)

TRANSISTOR	E	B	C
Q1	-5.60	+0.06	+14.7
Q2	-1.20	-0.57	+13.0
Q3	-10.8	-10.2	-1.20
Q4	-0.57	-1.22	-20.0
Q5	+0.08	-0.56	-18.5
Q6	+10.6	+9.90	+0.08
Q7	-16.8	-16.0	-2.20
Q8	-1.50	-2.20	-18.5
Q9	-0.76	-0.13	+14.7
Q10	-1.38	-0.76	+13.0
Q11	-0.10	-0.76	-19.8
Q12	-0.10	-0.74	-16.8
Q13	+16.0	+15.2	-1.50
Q14	-10.8	-10.1	-1.38

NOTES:

1. Voltages taken with multiplex input grounded.
2. Switch settings as follows:

   F_c - 100 KHz F_D - 7.5% Data cutoff 1.5 KHz

Table 5-11. Transistor Voltages, Output Printed-Circuit Card (A2J15)

TRANSISTOR	E	B	C
Q1	+19.5	+18.5	+19.5
Q2	+19.5	+18.5	+19.5
Q3	+19.2	+18.6	-3.80
Q4	-4.45	-3.80	+14.5
Q5	+19.5	+18.5	+0.56
Q6	0.00	+0.56	+14.6
Q7	-6.60	-0.02	+19.2
Q8	-6.40	0.00	+14.6
Q9 (A)	-0.60	-0.04	+14.6
Q9 (B)	-0.59	-0.04	+19.5
Q10 (A)	-1.21	-0.60	+14.6
Q10 (B)	-1.20	-0.60	+19.5
Q11	-4.50	-5.50	-19.1
Q12	-16.0	-15.2	-1.38
Q13	-16.0	-15.2	-0.70
Q14	-0.06	-0.70	-19.3
Q15	-16.0	-15.2	-5.2
Q16	+15.0	+15.6	+23.0
Q17	+14.0	+14.7	+23.0
Q18	+14.8	+15.4	+23.0
Q19	+15.6	+15.0	+0.56
Q20	+15.5	+14.8	0.00
Q21	+14.0	+14.6	+23.0
Q22 (A)	-5.60	0.00	+15.6
Q22 (B)	-5.60	0.00	+15.2
Q23	-5.60	+0.02	+14.6
Q24	-5.60	0.00	+14.6
Q25	-0.02	+5.60	+14.6
Q26	-1.20	-0.56	+14.6
Q27	-1.20	-0.56	+14.6
Q28	+14.6	+14.0	0.00
Q29	+14.6	+14.0	+1.38
Q30	+0.74	+1.38	+22.0
Q31	+0.11	+0.74	+18.0
Q32	+0.12	+0.74	+18.0
Q33	+0.36	-0.70	-19.2
Q34	-16.1	-15.4	-1.30
Q35	+0.04	-0.62	-19.0
Q36	+0.04	-0.62	-19.0
Q37	-0.63	-1.30	-18.6

NOTES:

1. Voltages taken with multiplex input grounded.
2. Switch settings as follows:

   F_c - 100 KHz F_D - 7.5% Data cutoff 1.5 KHz

Table 5-12. Transistor Voltages, Regulator Printed-Circuit Card (A2J16)

TRANSISTOR	E	B	C
Q1	+32.2	+31.8	+25.0
Q2	+24.2	+25.0	+34.5
Q3	+15.1	+15.7	+23.6
Q4	+17.8	+17.1	+13.5
Q5	+13.0	+13.6	+22.0
Q7	-0.50	0.00	+25.0
Q8	+11.1	+11.7	+25.0
Q9	+8.60	+9.20	+11.7
Q10	+8.60	+9.20	+9.90
Q11	+13.0	+13.6	+15.8
Q12	+8.40	+9.00	+13.7
Q13	+8.40	+9.10	+8.50
Q16	-0.60	+0.02	+12.6
Q17	-0.60	+0.05	+13.9
Q18	+6.40	+0.03	-10.0
Q19	+0.64	+0.02	-8.6
Q20	+6.30	+6.90	+12.0
Q21	-20.9	-21.5	-30.0
Q22	+7.00	+7.60	+12.0
Q23	+12.5	+11.8	+7.60
Q24	-27.8	-27.0	-21.5
Q25	-9.30	-10.0	-14.6
Q26	-16.6	-15.9	-9.90
Q27	-8.60	-9.30	-14.6
Q28	-0.57	+0.04	+7.60
Q29	-5.70	+0.02	+6.30
Q30	+0.35	+0.02	-21.5
Q31	-11.0	-11.7	-21.5
Q32	-8.40	-9.10	-11.7
Q33	-8.40	-9.10	-8.5

Table 5-13. Connection List, Model 4140 Programmable Tunable Discriminator

FROM	TO	SIGNAL
A2J1-1	A2J2-31	+24V
A2J1-2	A2J3-2	100 Hz-
A2J1-2	A2J8-17	1 KHz
A2J1-3	A2J10-29	7-1/2%
A2J1-3	A2J2-5	7-1/2%
A2J1-4	A2J10-30	15%
A2J1-4	A2J2-6	15%
A2J1-5	A2J2-8	40%
A2J1-7	A2J3-7	10 KHz-
A2J1-7	A2J8-15	100 KHz
A2J1-9	A2J2-25	Sect. (1) C IN
A2J1-10	A2J3-10	1 KHz-
A2J1-10	A2J8-16	10 KHz
A2J1-11	A2J10-31	30%
A2J1-11	A2J2-7	30%
A2J1-12	A2J2-26	IN
A2J1-13	A2J2-2	OUT
A2J1-14	A2J2-23	-20
A2J1-15	A2J2-21	+12V
A2J1-16	A2J2-27	+15V
A2J1-17	A2J2-15	100 KHz-
A2J1-17	A2J8-9	1.5 MHz
A2J1-18	A2J2-24	Sect. (1) C OUT
A2J1-19	A2J2-10	GRD
A2J1-20	A2J3-20	3-1
A2J1-20	A2J8-29	3-1
A2J1-21	A2J2-17	1 MHz
A2J1-21	A2J8-24	1 MHz
A2J1-22	A2J3-22	1-1
A2J1-22	A2J8-21	1-1
A2J1-23	A2J3-23	1-4
A2J1-23	A2J8-19	1-4
A2J1-24	A2J3-24	2-1
A2J1-24	A2J8-32	2-1
A2J1-25	A2J3-25	2-4
A2J1-25	A2J8-23	2-4
A2J1-26	A2J3-26	3-4
A2J1-26	A2J8-27	3-4
A2J1-27	A2J3-27	3-8
A2J1-27	A2J8-26	3-8
A2J1-28	A2J3-28	3-2
A2J1-28	A2J8-28	3-2
A2J1-29	A2J3-29	2-8
A2J1-29	A2J8-22	2-8

FROM	TO	SIGNAL
A2J1-30	A2J3-30	2-2
A2J1-30	A2J8-30	2-2
A2J1-31	A2J2-14	1-8
A2J1-31	A2J8-18	1-8
A2J1-32	A2J3-32	1-2
A2J1-32	A2J8-20	1-2
A2J2-1	A2J3-18	Sect. (2) C IN
A2J2-3	A2J3-12	Sect. (2) OUT
A2J2-4	A2J3-9	Sect. (2) C OUT
A2J2-5	A2J3-11	7-1/2%
A2J2-6	A2J3-3	15%
A2J2-7	A2J3-4	30%
A2J2-8	A2J3-5	40%
A2J2-9	A1DS12-2	OOR
A2J2-9	A2J10-27	OOR
A2J2-10	A2J3-19	GRD
A2J2-13	A1TP3	BP OUT
A2J2-14	A2J3-31	BP 1-8
A2J2-15	A2J3-17	BP 1 MHz
A2J2-17	A2J3-21	BP 1 MHz
A2J2-18	A1S1G-14	LP 100 KHz
A2J2-19	A2J11-26	LP 1-8
A2J2-20	A2J11-9	LP 1-4
A2J2-21	A2J3-15	+12V
A2J2-22	A1TP4	MPX IN
A2J2-23	A2J3-14	-20
A2J2-27	A2J3-16	+15V
A2J2-28	A1M2	IN MTR (+)
A2J2-29	A2J6-20	IN MTR INPUT
A2J2-30	A1M2	IN MTR (-)
A2J2-31	A2J3-1	+24V
A2J2-32	A3J3-1	MPX IN
A2J3-1	A2J4-1	+24V
A2J3-2	A2J4-4	100 Hz- 1 KHz

Table 5-13 (Cont'd.). Connection List, Model 4140
Programmable Tunable Discriminator

FROM	TO	SIGNAL
A2J3-3	A2J4-7	15%
A2J3-4	A2J4-10	30%
A2J3-5	A2J10-32	40%
A2J3-7	A2J4-6	10 KHz-100 KHz
A2J3-10	A2J4-5	1 KHz-10 KHz
A2J3-11	A2J4-9	7-1/2%
A2J3-13	A2J6-2	OUT
A2J3-14	A2J4-2	-20V
A2J3-15	A2J4-13	+12V
A2J3-16	A2J4-3	+15V
A2J3-17	A2J4-8	100 KHz-1.5 MHz
A2J3-19	A2J4-16	GRD
A2J3-20	A2J4-28	3-1
A2J3-21	A2J4-19	1 MHz
A2J3-22	A2J4-14	1-1
A2J3-23	A2J4-12	1-4
A2J3-24	A2J4-21	2-1
A2J3-25	A2J4-25	2-4
A2J3-26	A2J4-24	3-4
A2J3-27	A2J4-22	3-8
A2J3-28	A2J4-26	3-2
A2J3-29	A2J4-27	2-8
A2J3-30	A2J4-23	2-2
A2J3-31	A2J4-17	1-8
A2J3-32	A2J4-11	1-2
A2J4-1	A2J6-8	+24V
A2J4-2	A2J6-29	-20V
A2J4-3	A2J6-30	+15V
A2J4-13	A2J8-25	+12V
A2J4-15	A3J2-1	TSC IN
A2J4-16	A2J5-16	GRD
A2J4-20	A2J6-6	TSC OUT
A2J4-29	A2J4-30	BAL OUT
A2J4-30	A2J6-5	BAL OUT
A2J5-31	A3J8	SIG GRD
A2J5-32	A3S1-C	DEV SEN
A2J6-1	A2J5-1	GRD

FROM	TO	SIGNAL
A2J6-1	A2J8-1	GRD
A2J6-3	A2J8-31	+15V REG
A2J6-4	A1R2-3	BAL POT
A2J6-8	A2J6-31	+24V
A2J6-19	A1R2-1	BAL POT
A2J6-24	A2J5-24	GRD
A2J6-25	A2J8-4	-8V
A2J6-26	A1DS11-2	ZERO SIG LMP
A2J6-27	A2J10-7	ZERO SIG RLY
A2J6-28	A2J8-7	SCH OUT(2)
A2J6-29	A2J8-11	-20V
A2J6-30	A2J8-12	+15V
A2J6-31	A2J8-8	+24V
A2J6-32	A2J8-2	SCH OUT(1)
A2J8-1	A2J8-14	GRD
A2J8-3	A2J10-8	1 OUT
A2J8-4	A2J10-16	-8V
A2J8-5	A2J10-20	+6V
A2J8-6	A2J10-6	2 OUT
A2J8-8	A2J10-1	+24V
A2J8-9	A1S1F-14	
A2J8-10	A2J10-18	$\overline{1}$ OUT
A2J8-11	A2J10-19	-20V
A2J8-12	A2J10-28	+15V
A2J8-13	A2J10-13	$\overline{2}$ OUT
A2J8-14	A2J10-9	
A2J8-15	A1S1F-11	10 KHz-100 KHz
A2J8-16	A1S1F-8	1 KHz-10 KHz
A2J8-17	A1S1F-5	100 Hz-1 KHz
A2J8-18	A1S1D-17	1-8
A2J8-19	A1S1D-14	1-4
A2J8-20	A1S1D-11	1-2
A2J8-21	A1S1D-8	1-1
A2J8-22	A1S1D-5	2-8
A2J8-23	A1S1D-2	2-4

Table 5-13 (Cont'd.). Connection List, Model 4140
Programmable Tunable Discriminator

FROM	TO	SIGNAL
A2J8-24	A1S1E-2	1 MHz
A2J8-25	A2J10-25	+12V
A2J8-26	A1S1C-11	3-8
A2J8-27	A1S1C-8	3-4
A2J8-28	A1S1C-5	3-2
A2J8-29	A1S1C-2	3-1
A2J8-30	A1S1C-17	2-2
A2J8-32	A1S1C-14	2-1
A2J10-1	A2J12-9	+24V
A2J10-2	A2J11-31	DATA OUT
A2J10-3	A2J10-27	CLAMP RELAY
A2J10-3	A1DS12-2	OOR
A2J10-4	A2J15-4	- REF
A2J10-5	A2J15-3	+ REF
A2J10-7	A2J15-28	CLAMP RELAY
A2J10-9	A2J10-10	GRD
A2J10-10	A2J10-11	GRD
A2J10-12	A2J10-11	GRD
A2J10-12	A2J11-14	GRD
A2J10-16	A2J16-4	-8V
A2J10-19	A2J10-26	-20V
A2J10-20	A2J16-6	+6V
A2J10-21	A3S1-1	+SENSE
A2J10-22	A2J15-27	BE MTR
A2J10-22	A1M1+	BE MTR
A2J10-23	A2J15-26	BE MTR
A2J10-23	A1M1-	BE MTR
A2J10-24	A3S1-2	-SENSE
A2J10-25	A2J11-23	+12V
A2J10-26	A2J11-22	-20V
A2J10-28	A2J11-24	+15V
A2J10-29	A1S1E-5	7-1/2%
A2J10-30	A2J15-10	15%
A2J10-31	A2J15-9	30%
A2J10-32	A2J15-8	40%
A2J11-4	A2J12-1	1 Hz-10 Hz
A2J11-5	A2J12-3	100 Hz-1 KHz
A2J11-6	A2J12-2	10 Hz-100 Hz

FROM	TO	SIGNAL
A2J11-8	A2J12-17	2-1
A2J11-9	A2J12-19	1-4
A2J11-10	A2J12-21	1-1
A2J11-12	A2J12-4	1 KHz-10 KHz
A2J11-14	A2J12-10	GRD
A2J11-15	A2J12-7	10 KHz-100 KHz
A2J11-16	A2J12-8	CA
A2J11-17	A2J12-6	CD
A2J11-18	A2J12-32	OUT
A2J11-19	A2J12-31	2-4
A2J11-20	A2J12-29	3-1
A2J11-21	A2J12-27	3-4
A2J11-22	A2J12-11	-20V
A2J11-23	A2J12-5	+12V
A2J11-24	A2J12-22	+15V
A2J11-25	A2J12-20	1-2
A2J11-26	A2J12-18	1-8
A2J11-27	A2J12-16	2-2
A2J11-28	A2J12-30	2-8
A2J11-29	A2J12-28	3-2
A2J11-30	A2J12-26	3-8
A2J11-32	A2J15-11	DC OUT
A2J12-1	A2J13-1	1 Hz - 10 Hz
A2J12-2	A2J13-2	10 Hz-100 Hz
A2J12-3	A2J13-3	100 Hz-1 KHz
A2J12-4	A2J13-4	1 KHz-10 KHz
A2J12-5	A2J13-5	+12V
A2J12-6	A2J13-6	CD
A2J12-7	A2J13-7	10 KHz-100 KHz
A2J12-8	A2J13-8	CA
A2J12-9	A2J13-9	+24V
A2J12-10	A2J13-10	GRD
A2J12-11	A2J13-11	-20V
A2J12-16	A2J13-16	2-2
A2J12-17	A2J13-17	2-1
A2J12-18	A2J13-18	1-8
A2J12-19	A2J13-19	1-4
A2J12-20	A2J13-20	1-2

Table 5-13 (Cont'd.). Connection List, Model 4140
Programmable Tunable Discriminator

FROM	TO	SIGNAL
A2J12-21	A2J13-21	1-1
A2J12-22	A2J13-22	+15V
A2J12-24	A2J13-32	OUT
A2J12-26	A2J13-26	3-8
A2J12-27	A2J13-27	3-4
A2J12-28	A2J13-28	3-2
A2J12-29	A2J13-29	3-1
A2J12-30	A2J13-30	2-8
A2J12-31	A2J13-31	2-4
A2J13-1	A2J14-1	1 Hz-10 Hz
A2J13-2	A2J14-2	10 Hz-100 Hz
A2J13-3	A2J14-3	100 Hz-1 KHz
A2J13-4	A2J14-4	1 KHz-10 KHz
A2J13-5	A2J14-5	+12V
A2J13-6	A2J14-6	CD
A2J13-7	A2J14-7	10 KHz-100 KHz
A2J13-8	A2J14-8	CA
A2J13-9	A2J14-9	+24V
A2J13-10	A2J14-10	GRD
A2J13-11	A2J14-11	-20V
A2J13-16	A2J14-16	2-2
A2J13-17	A2J14-17	2-1
A2J13-18	A2J14-18	1-8
A2J13-19	A2J14-19	1-4
A2J13-20	A2J14-20	1-2
A2J13-21	A2J14-21	1-1
A2J13-22	A2J14-22	+15V
A2J13-24	A2J14-32	OUT
A2J13-26	A2J14-26	3-8
A2J13-27	A2J14-27	3-4
A2J13-28	A2J14-28	3-2
A2J13-29	A2J14-29	3-1
A2J13-30	A2J14-30	2-8
A2J13-31	A2J14-31	2-4
A2J14-1	A1S1F-17	1 Hz-10 Hz
A2J14-2	A1S1G-2	10 Hz-100 Hz
A2J14-3	A1S1G-5	100 Hz-1 KHz
A2J14-4	A1S1G-8	1 KHz-10 KHz
A2J14-5	A2J15-25	+12V
A2J14-6	A1S1E-17	CD
A2J14-7	A1S1G-11	10 KHz-100 KHz
A2J14-8	A1S1F-2	CA
A2J14-9	A2J15-6	+24V
A2J14-10	A2J15-20	GRD
A2J14-11	A2J15-7	-20V
A2J14-16	A1S1A-17	2-2
A2J14-17	A1S1A-14	2-1
A2J14-18	A1S1B-17	1-8
A2J14-19	A1S1B-14	1-4
A2J14-20	A1S1B-11	1-2
A2J14-21	A1S1B-8	1-1
A2J14-22	A2J15-14	+15V
A2J14-24	A2J15-1	OUT
A2J14-26	A1S1A-11	3-8
A2J14-27	A1S1A-8	3-4
A2J14-28	A1S1A-5	3-2
A2J14-29	A1S1A-2	3-1
A2J14-30	A1S1B-5	2-8
A2J14-31	A1S1B-2	2-4
A2J15-5	A2J16-31	HF OUT
A2J15-6	A2J16-14	+24V
A2J15-7	A2J16-5	-20V
A2J15-8	A1S1E-14	40%
A2J15-9	A1S1E-11	30%
A2J15-10	A1S1E-8	15%
A2J15-12	A2J16-32	HF IN
A2J15-14	A2J16-11	+15V
A2J15-18	A1R1-3	BE VOLTS
A2J15-19	A2J15-20	GRD
A2J15-20	A2J16-20	GRD
A2J15-22	A1R1-2	BE VOLTS
A2J15-25	A2J16-30	+12V
A2J15-30	A4TB1Q1C	- LIMIT
A2J15-31	A4TB1Q2C	+ LIMIT
A2J15-32	A1TP2	DATA OUT

Table 5-13 (Cont'd.). Connection List, Model 4140
Programmable Tunable Discriminator

FROM	TO	SIGNAL
A2J15-32	A3J1-1	DATA OUT
A2J16-1	A4C3+	UNREG +24V
A2J16-3	A4Q2-B	+24V REG.
A2J16-5	A4Q1-E	-20V
A2J16-7	A4Q4-B	+15V REG.
A2J16-9	A4C1+	UNREG -20V
A2J16-11	A4Q4-E	+15V
A2J16-12	A4C2-	GRD
A2J16-13	A1S2-12	GRD
A2J16-13	A1S1G17	GRD
A2J16-14	A4Q2-E	+24V
A2J16-20	A4C1-	UNREG -20V
A2J16-24	A4Q1-B	-20V REG.
A2J16-25	A1S13-B	UNREG +12V
A2J16-25	A4C2-	UNREG +12V
A2J16-27	A4Q3-B	+12V REG.
A2J16-28	A4C2+	UNREG +12V
A2J16-28	A1S13-A	UNREG +12V
A2J16-29	A1DS12-1	+12V
A2J16-30	A4Q3-E	+12V

FROM	TO	SIGNAL

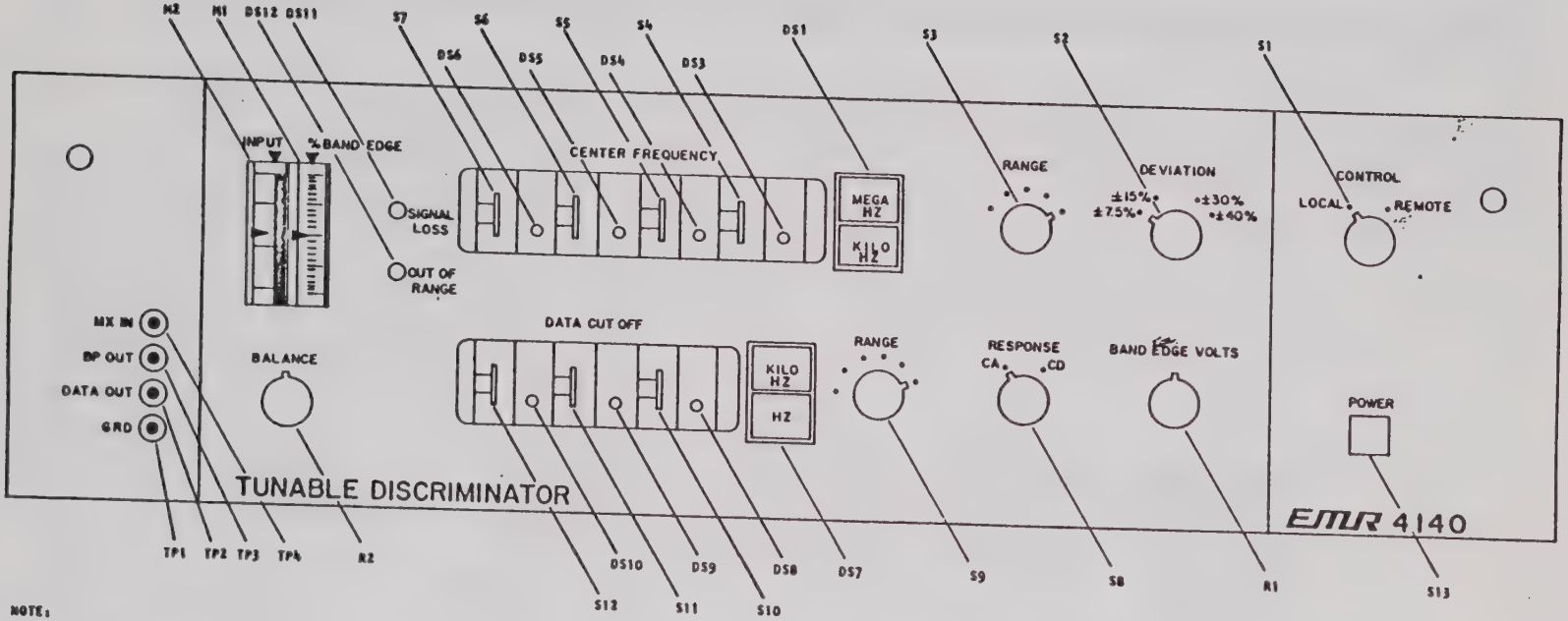

NOTE:

1. EMR DRAWING CONTROL NO. 4140-020.

Figure 5-2. Front-Panel Assembly A1, Location of Components

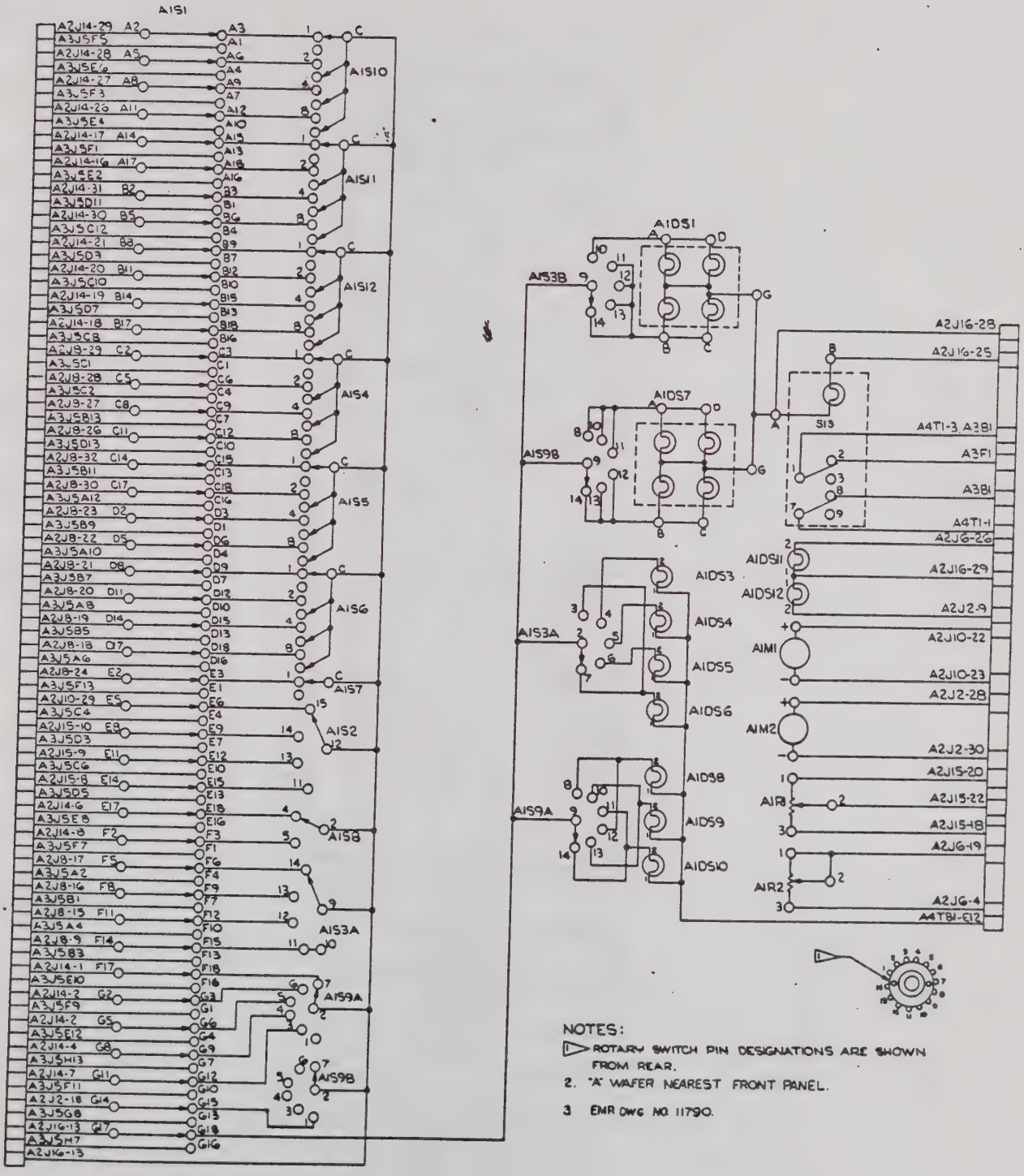

Figure 5-3. Front-Panel Assembly A1, Schematic Diagram

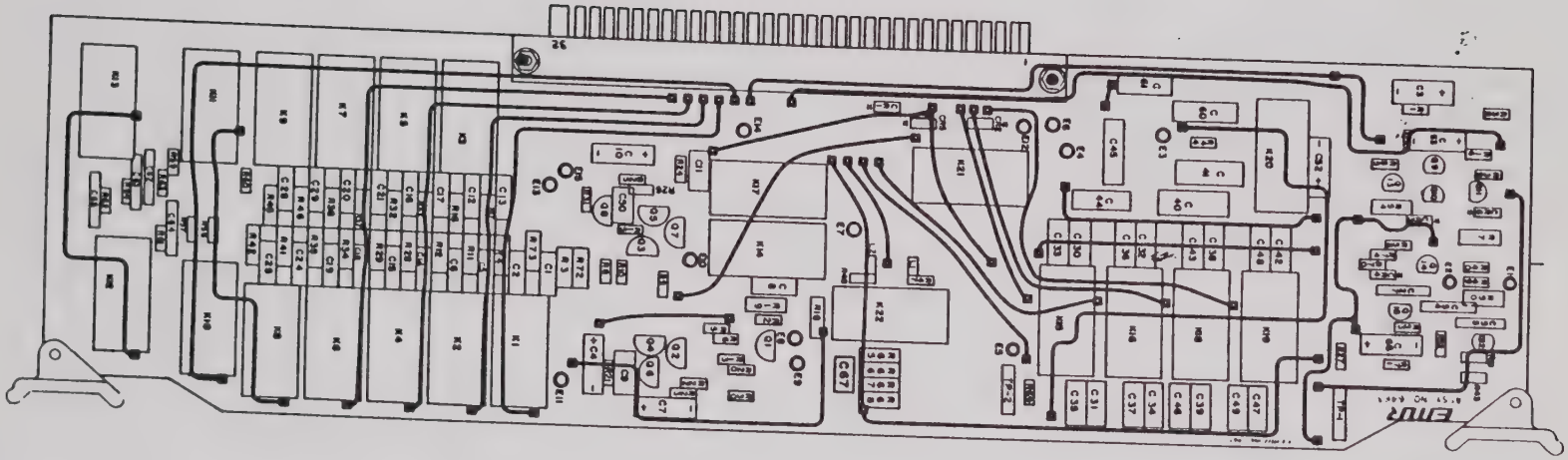

NOTE:
1. EMR DRAWING NO. 6463.

Figure 5-4. BPIF No. 1 Printed-Circuit Card A2J1, Location of Components

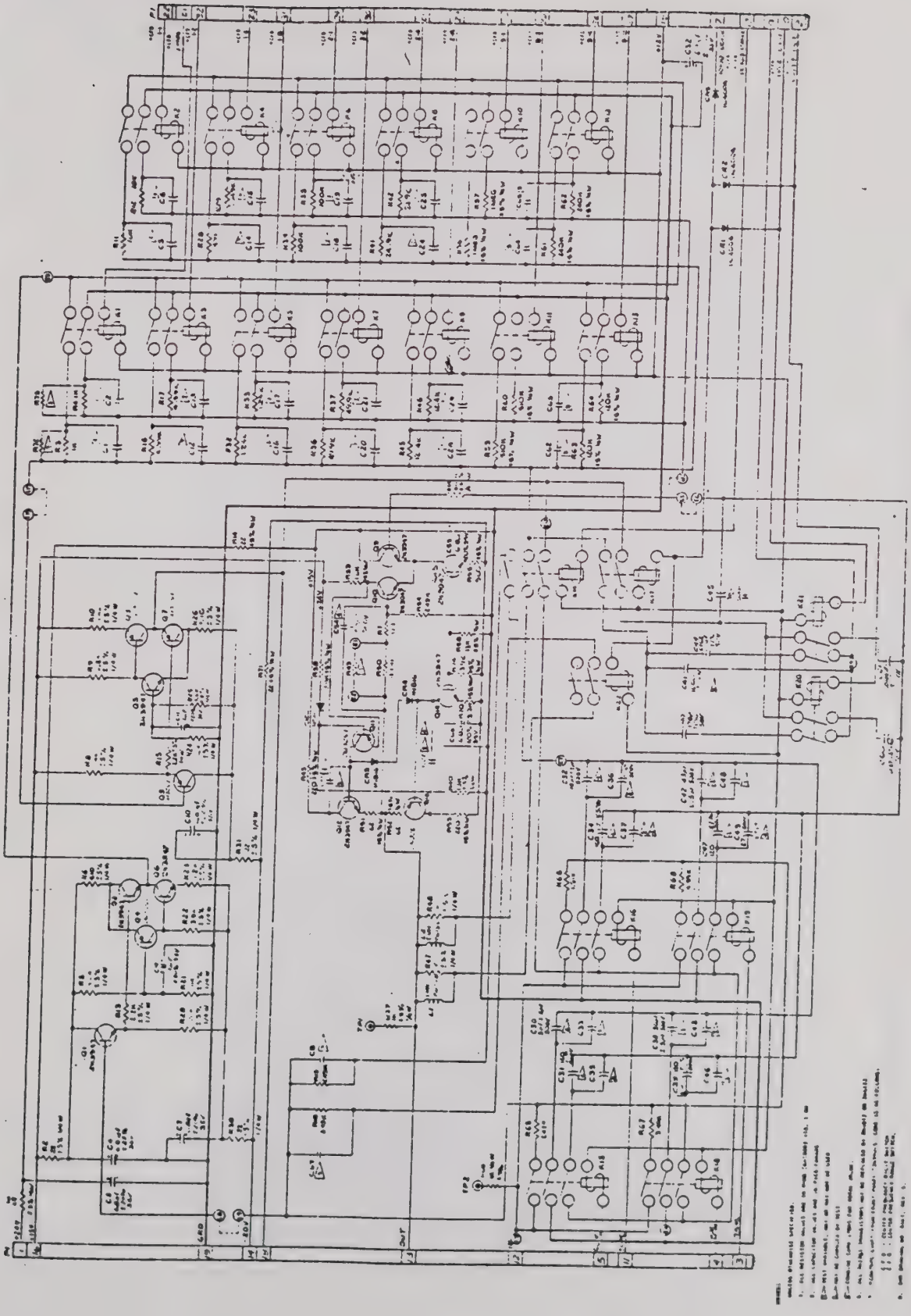

Figure 5-5. BPIF No. 1 Printed-Circuit Card A2J1 Schematic Diagram

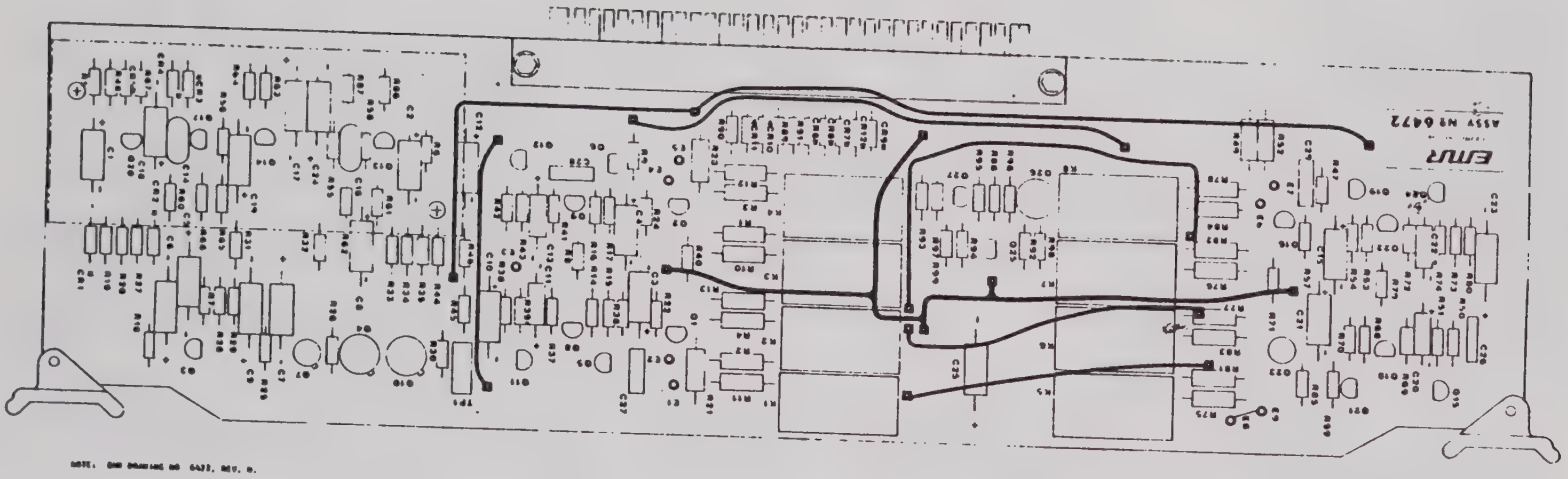

Figure 5-6. Input Printed-Circuit Card A2J2 Location of Components

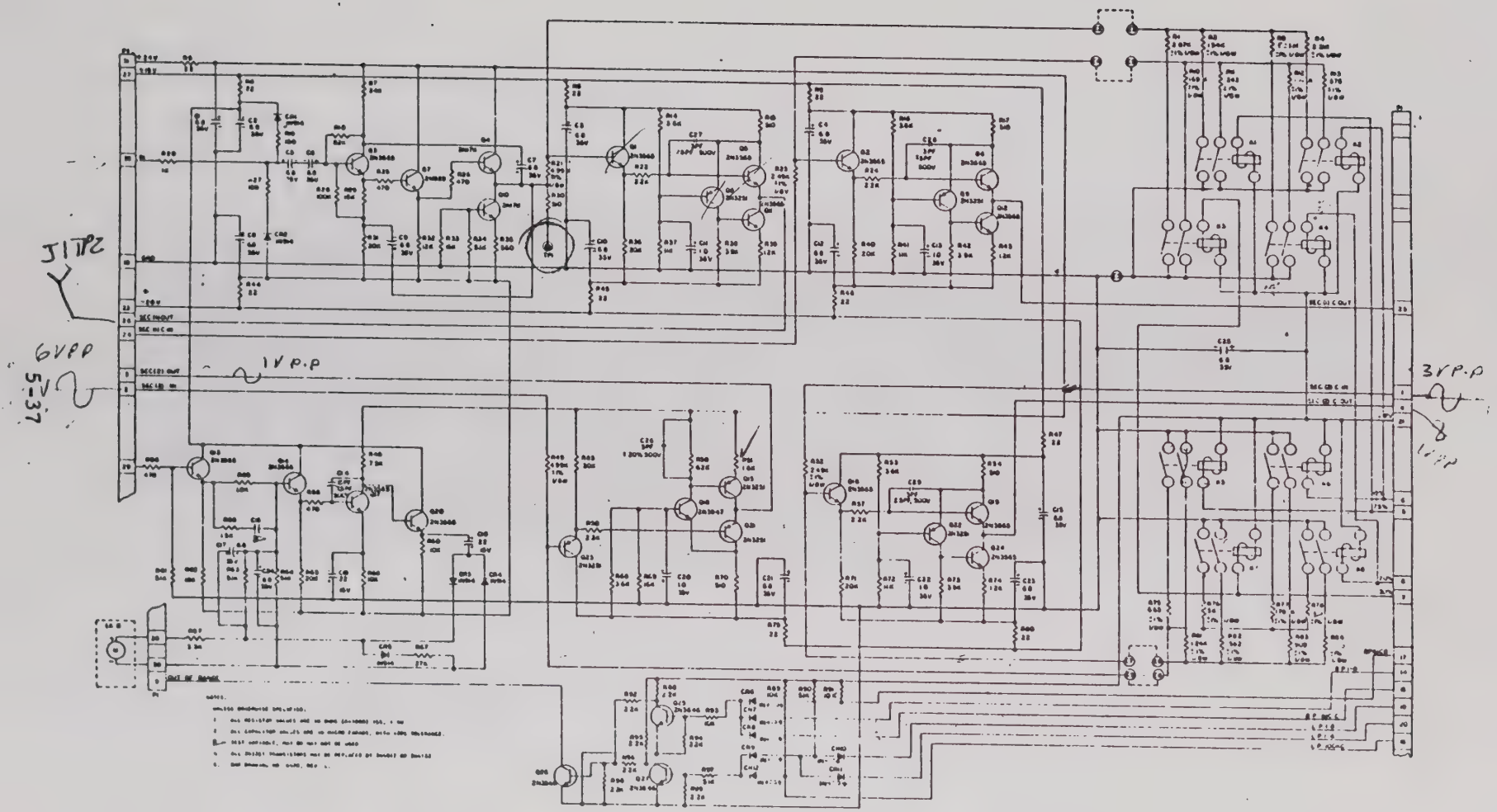

Figure 5-7. Input Printed-Circuit Card A2J2 Schematic Diagram

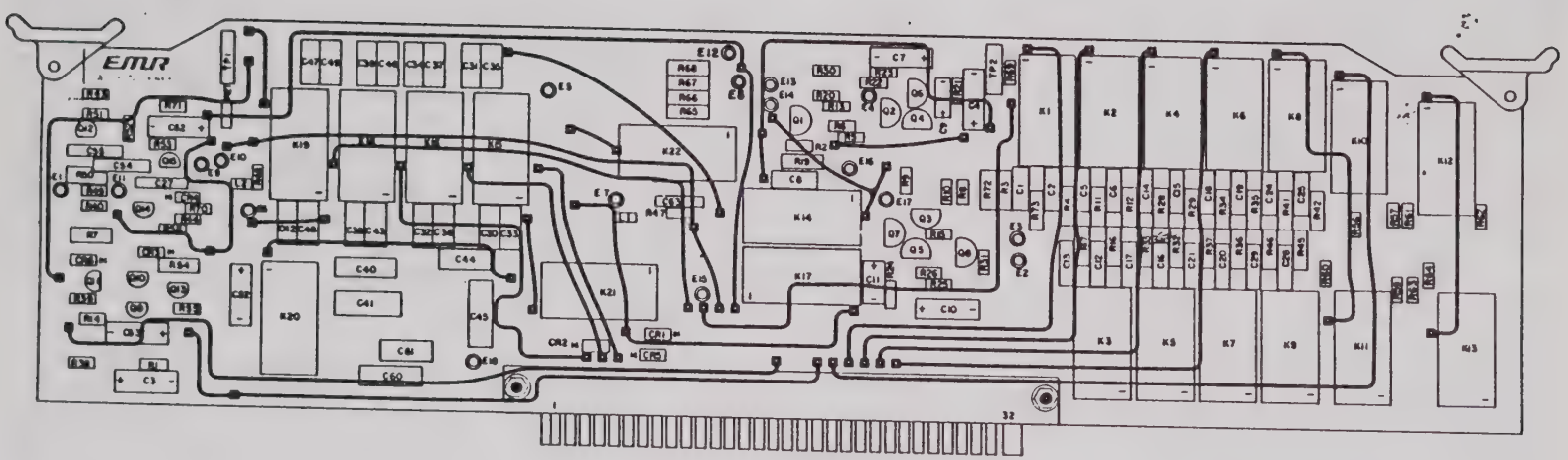

NOTE:
1. EMR DRAWING NO. 6466.

Figure 5-8. BPIF No. 2 Printed-Circuit Card A2J3, Location of Components

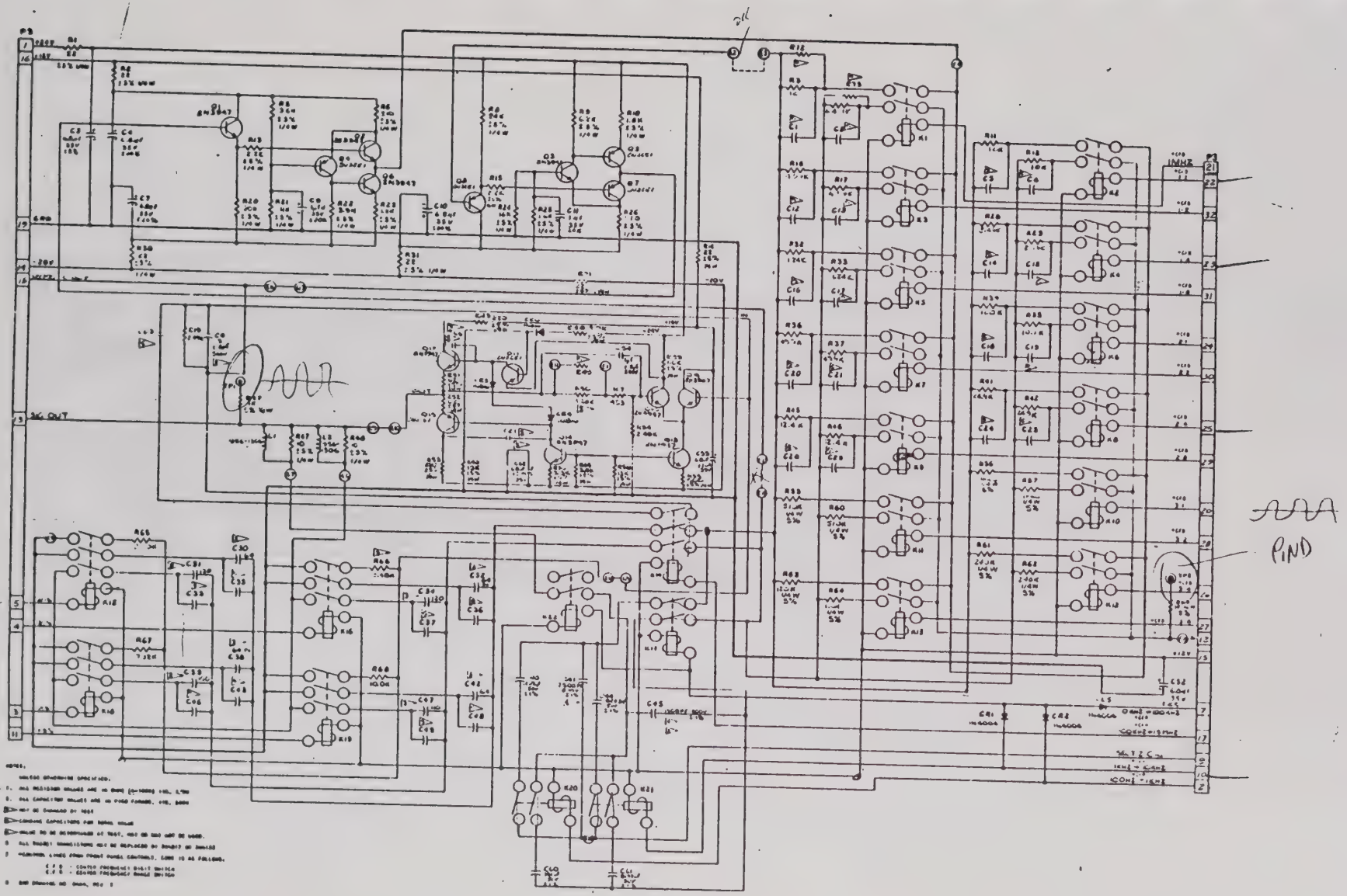

Figure 5-9. BPIF No. 2 Printed-Circuit Card A2J3 Schematic Diagram

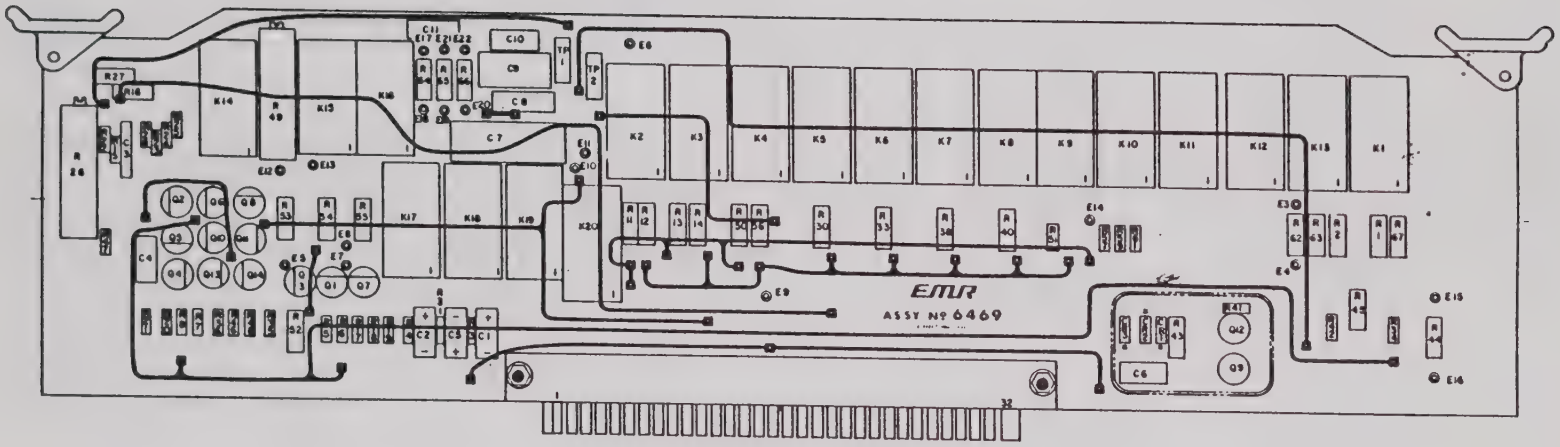

NOTE:
1. EMR DRAWING NO. 6469.

Figure 5-10. TSC Printed-Circuit Card A2J4 Location of Components

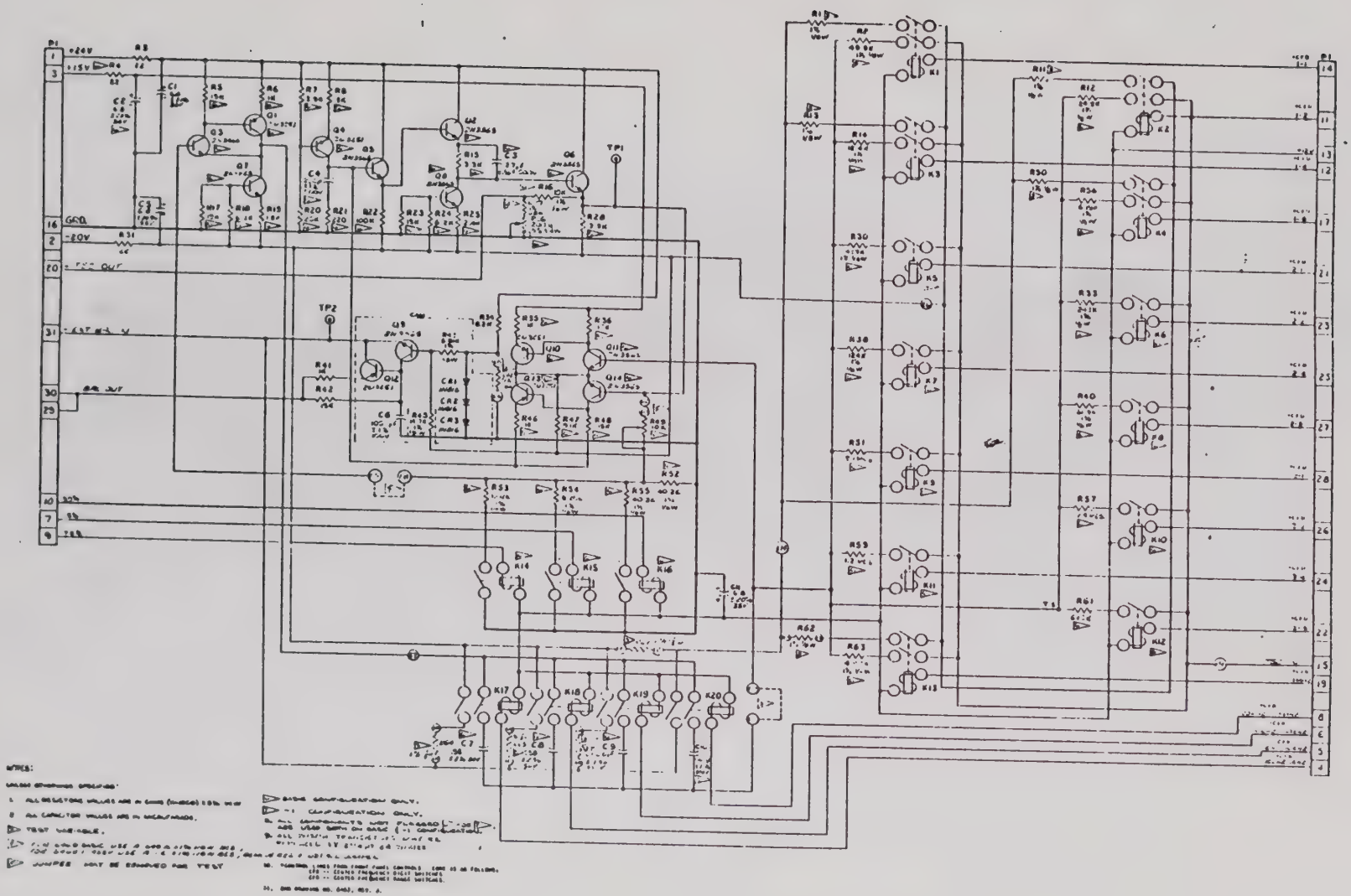

Figure 5-11. TSC Printed-Circuit Card A2J4 Schematic Diagram

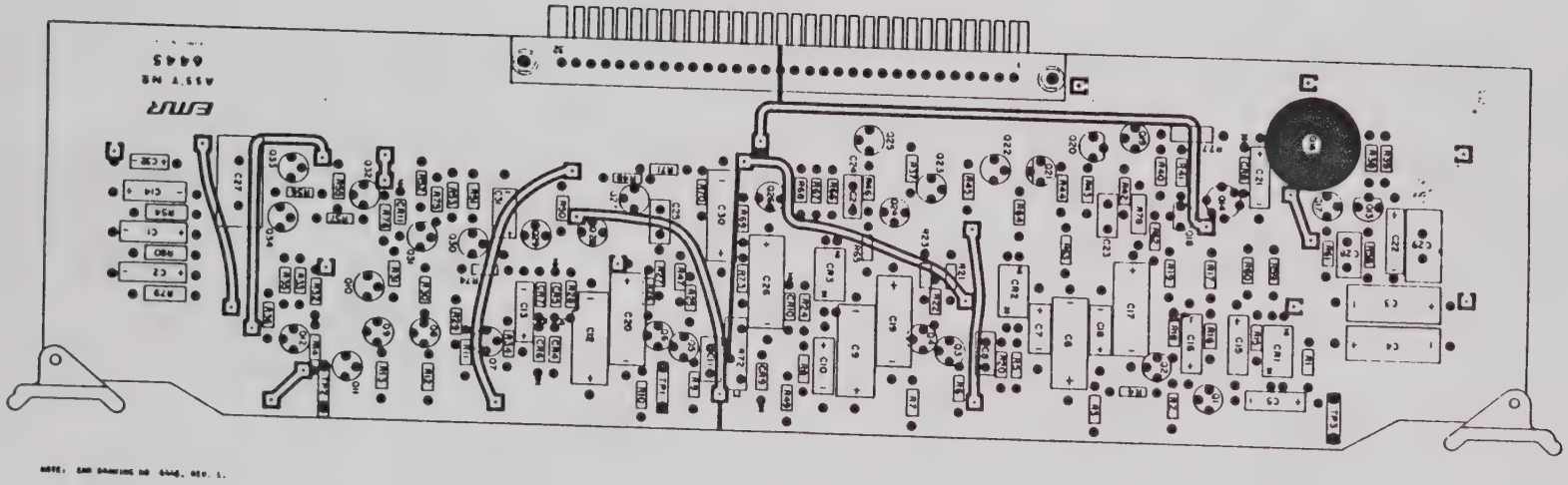

Figure 5-12. Limiter Printed-Circuit Card A2J6 Location of Components

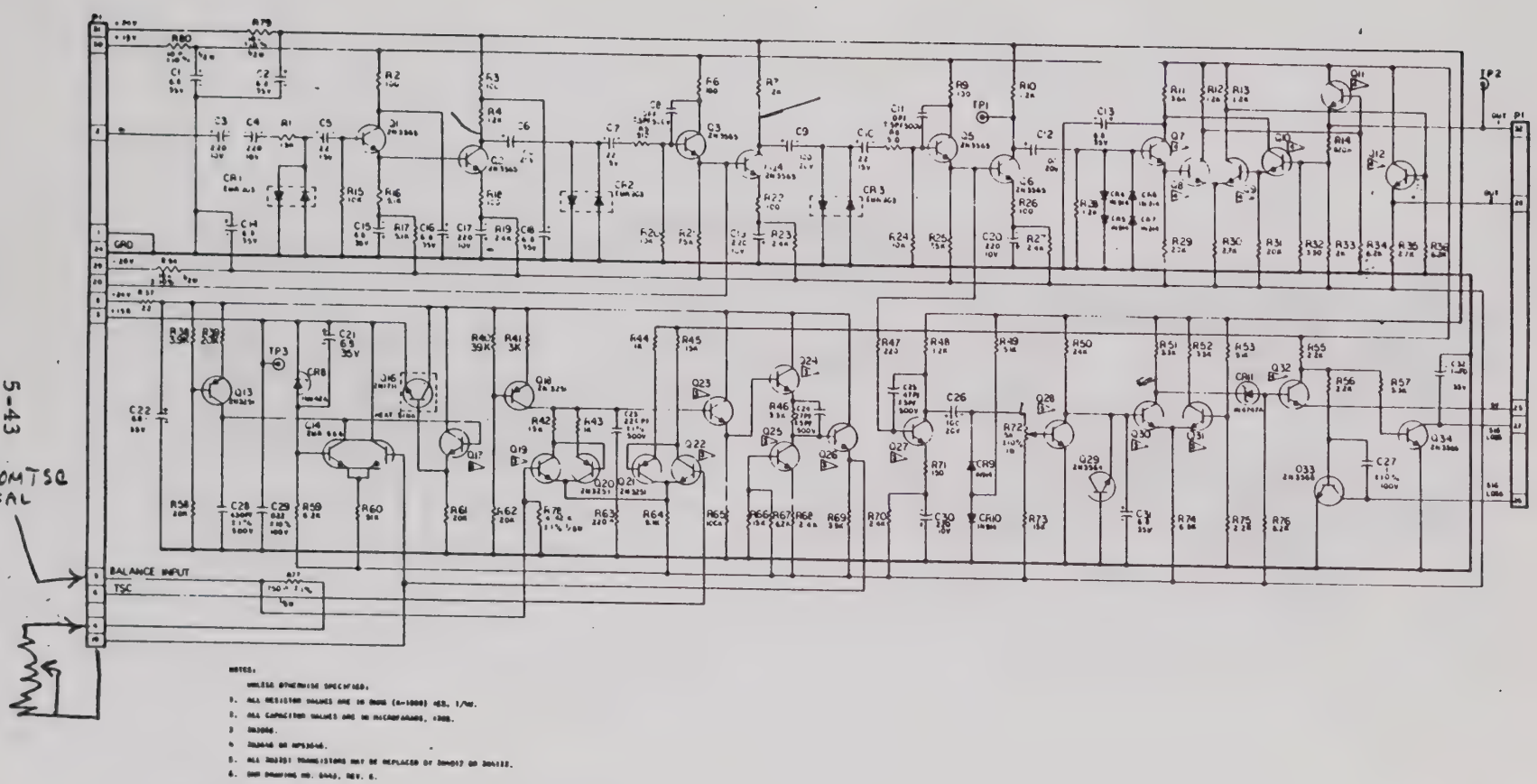

Figure 5-13. Limiter Printed-Circuit Card A2J6 Schematic Diagram

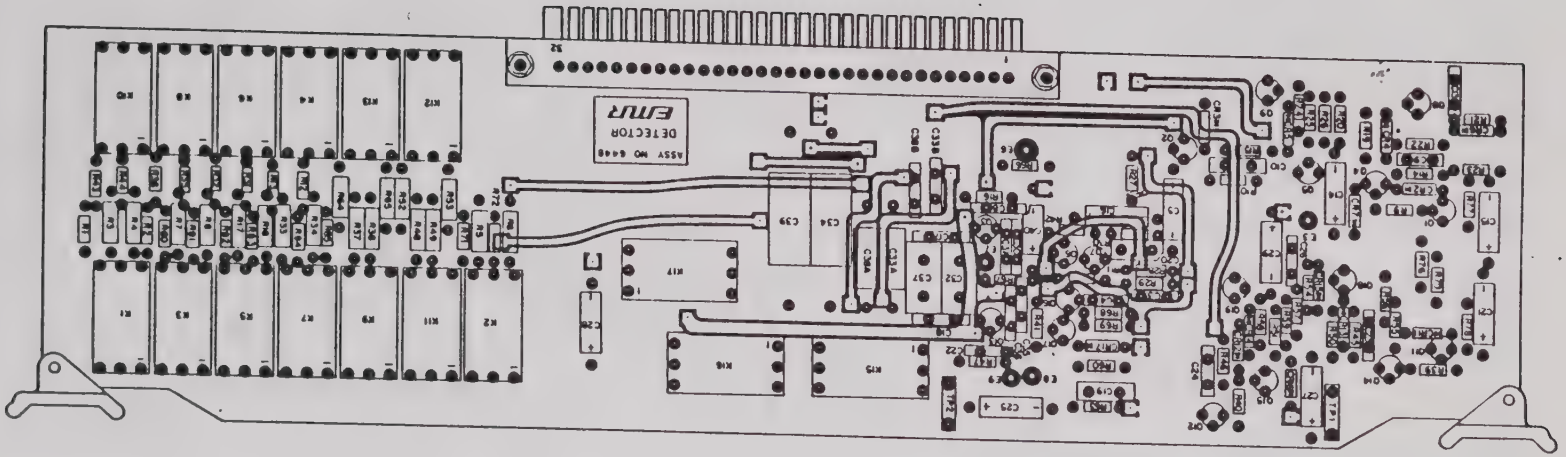

NOTE:
1. EMR DRAWING NO. 6448.

Figure 5-14. Detector Printed-Circuit Card A2J8, Location of Components

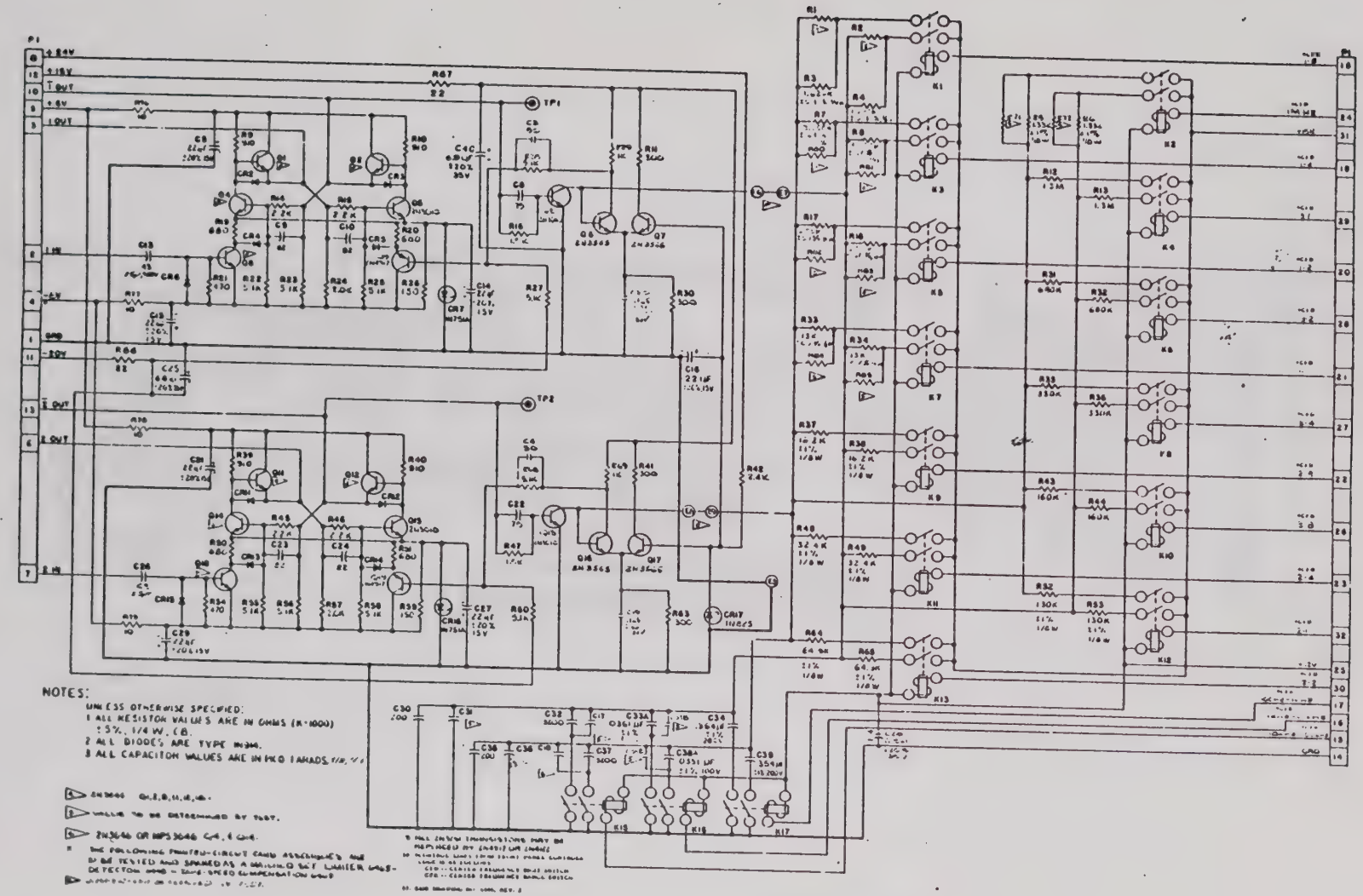

Figure 5-15. Detector Printed-Circuit Card A2J8 Schematic Diagram

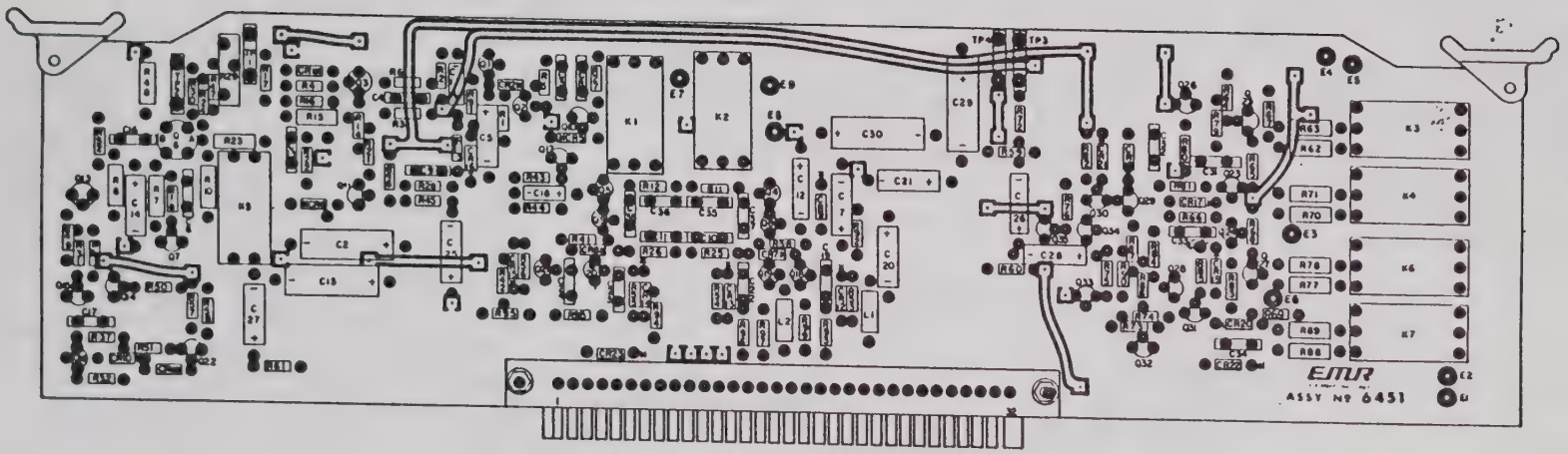

NOTE:
1. EMR DRAWING NO. 6451.

Figure 5-16. Voltage Switch Printed-Circuit Card A2J10 Location of Components

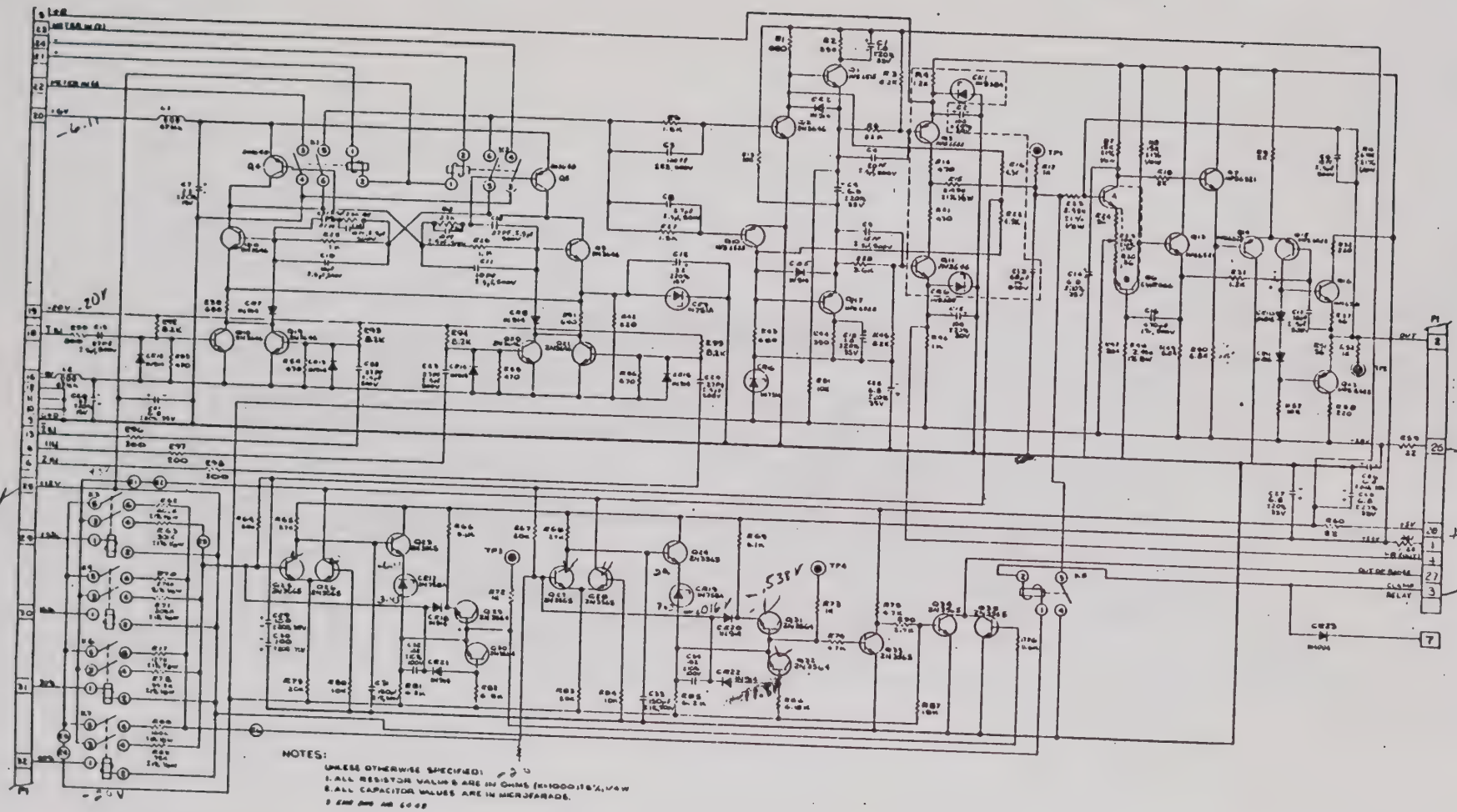

Figure 5-17. Voltage Switch Printed-Circuit Card A2J10, Schematic Diagram

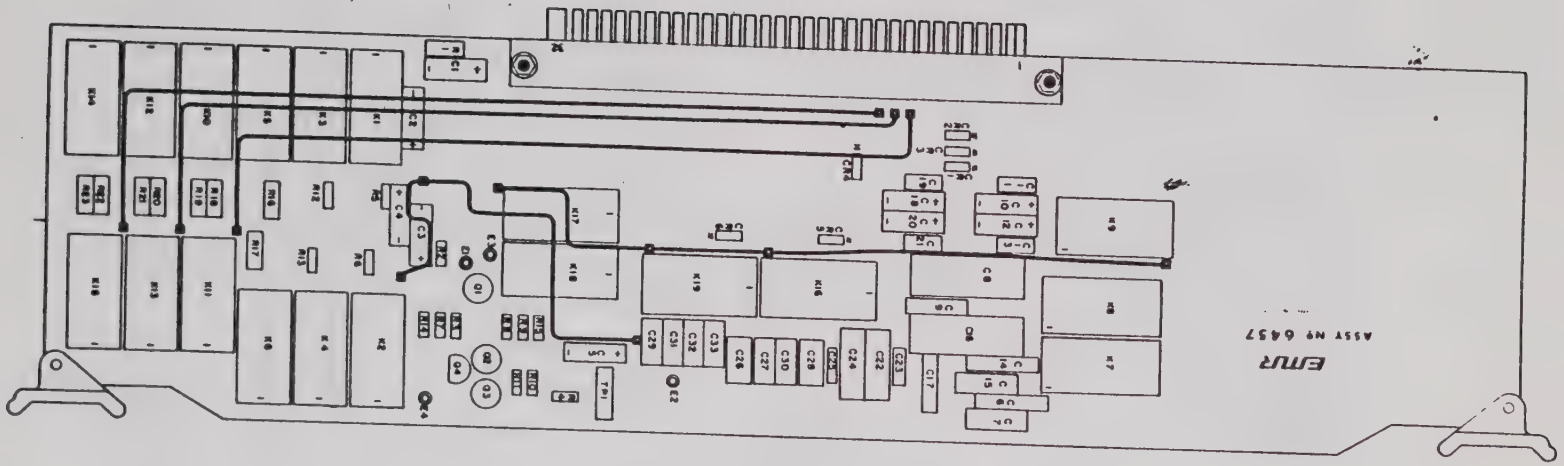

NOTE:
1. EMR DRAWING NO. 6457.

Figure 5-18. LPOF Single-Pole Printed-Circuit Card A2J11, Location of Components

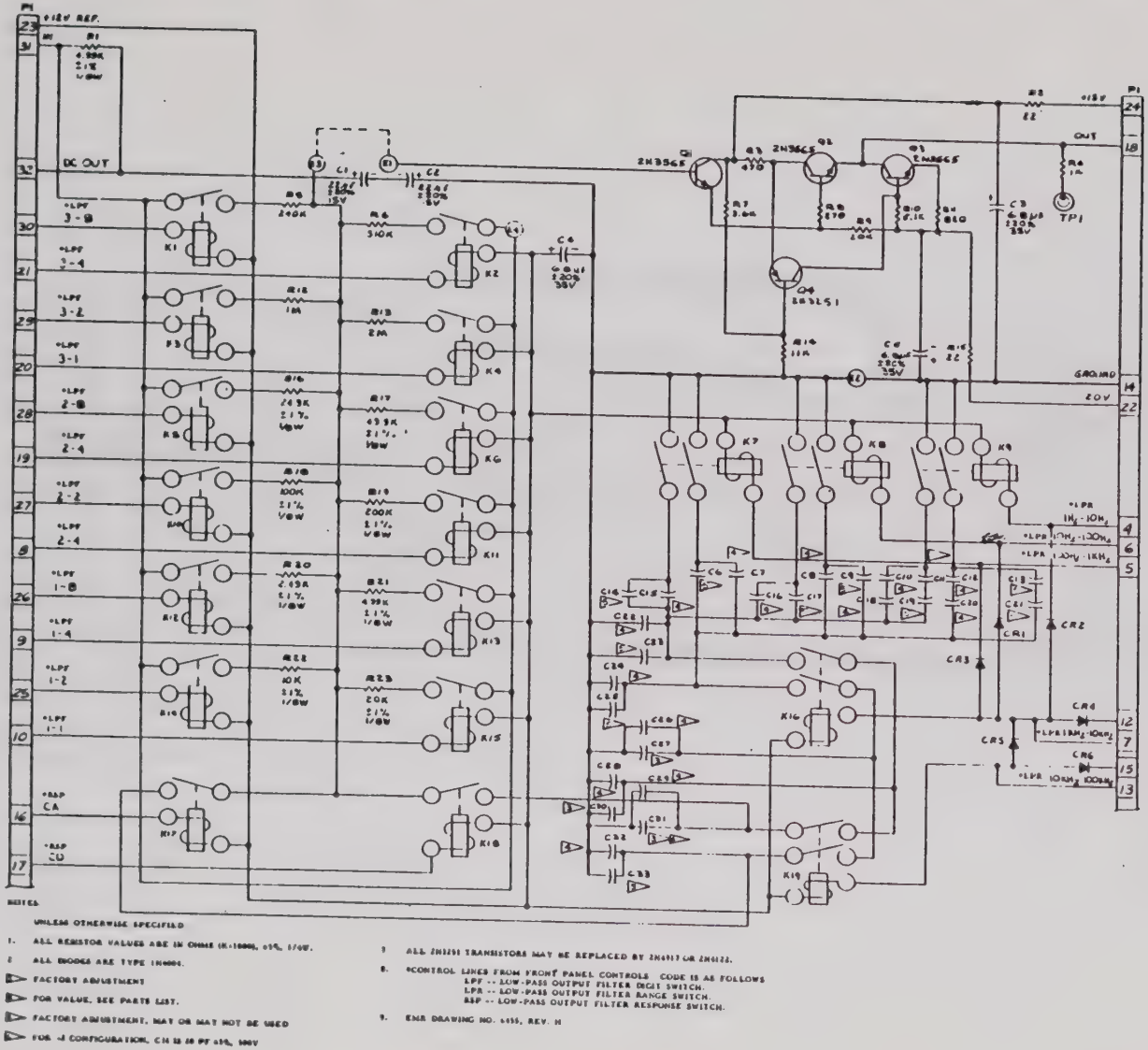

Figure 5-19. LPOF Single-Pole Printed-Circuit Card Schematic Diagram

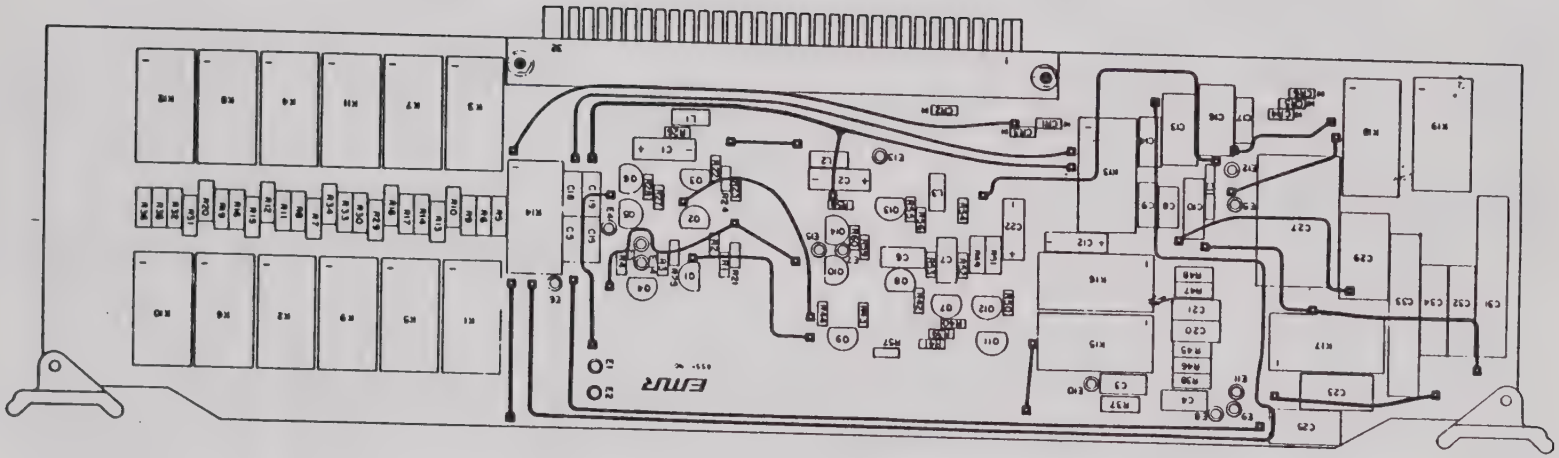

NOTE:
1. EMR DRAWING NO. 7525.

Figure 5-20. LPOF Pole-Pair Printed-Circuit Card A2J12 Location of Components

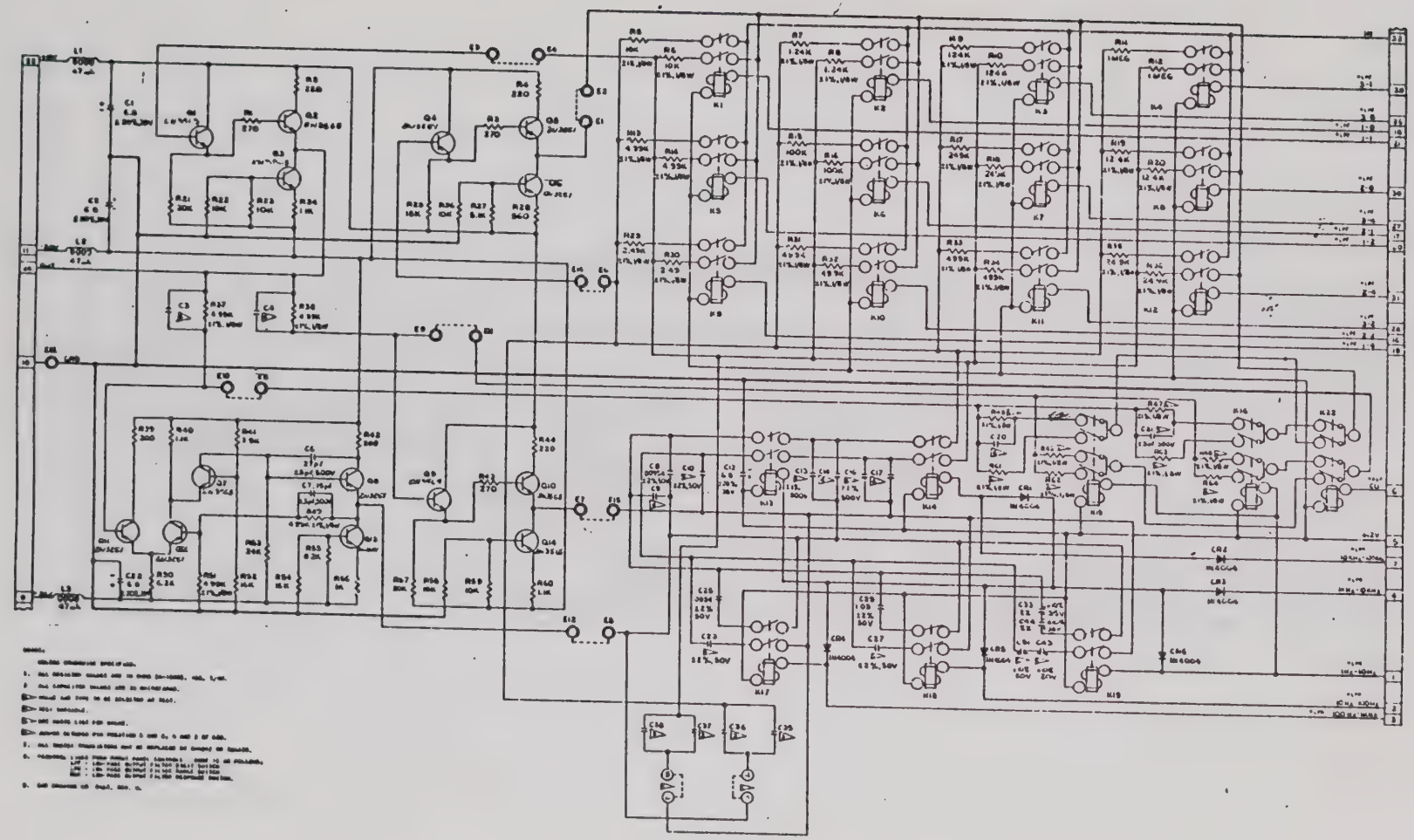

Figure 5-21. LPOF Pole-Pair Printed-Circuit Card A2J12 Schematic Diagram

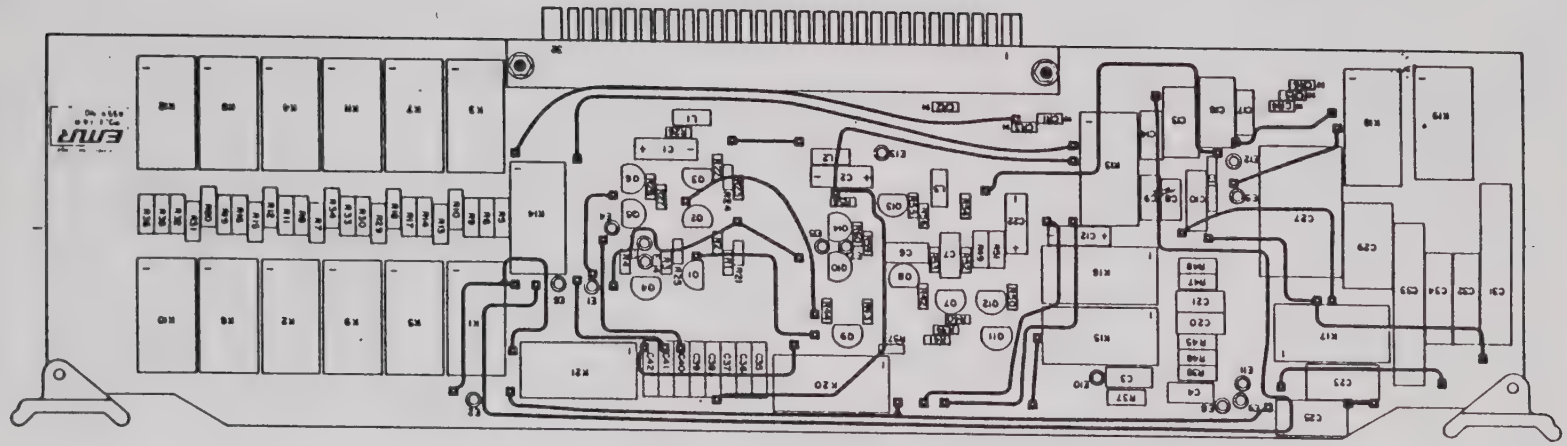

NOTE:
1. EMR DRAWING NO. 7526.

Figure 5-22. LPOF Pole-Pair Printed-Circuit Card A2J13, Location of Components

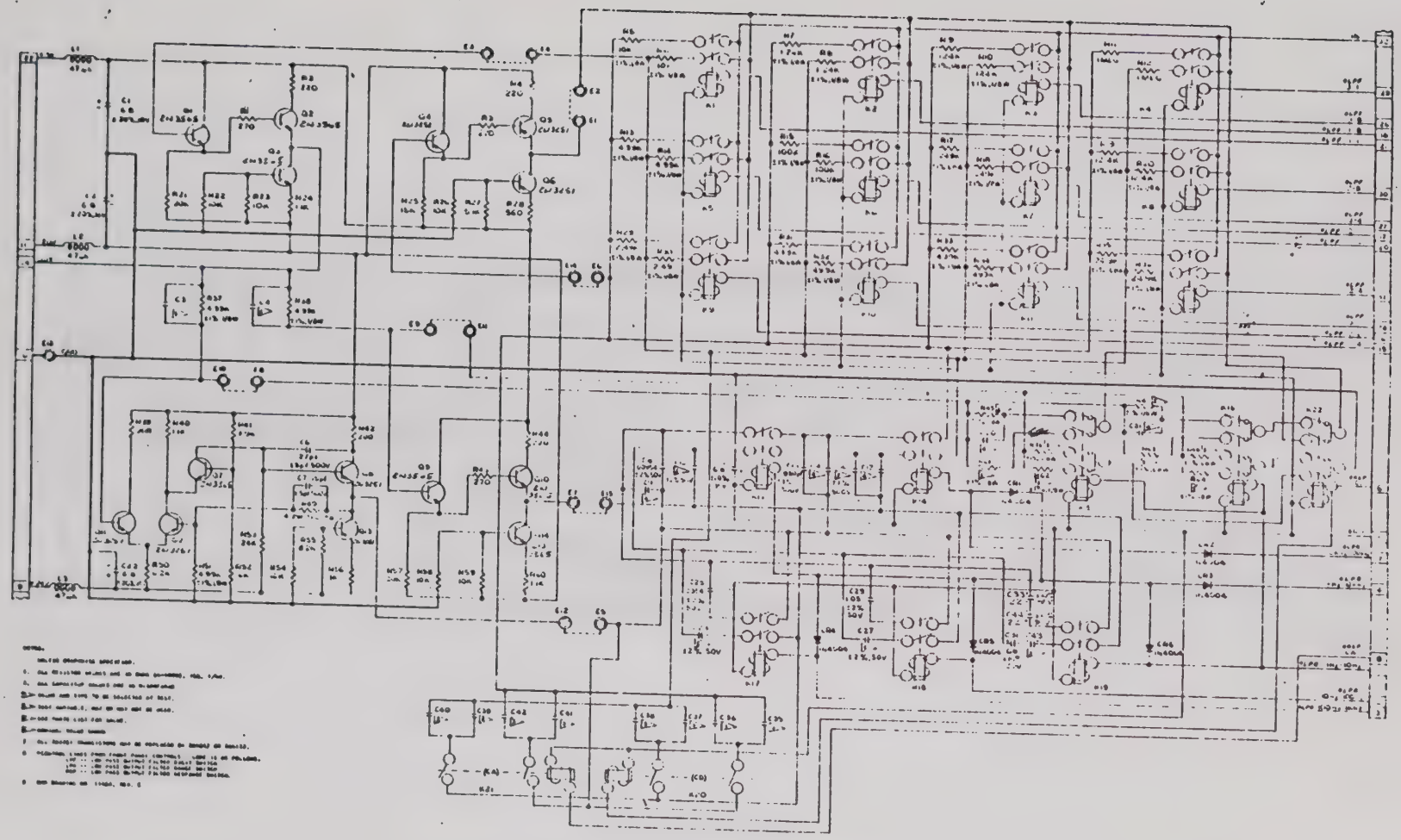

Figure 5-23. LPOF Pole-Pair Printed-Circuit Card A2J13 Schematic Diagram

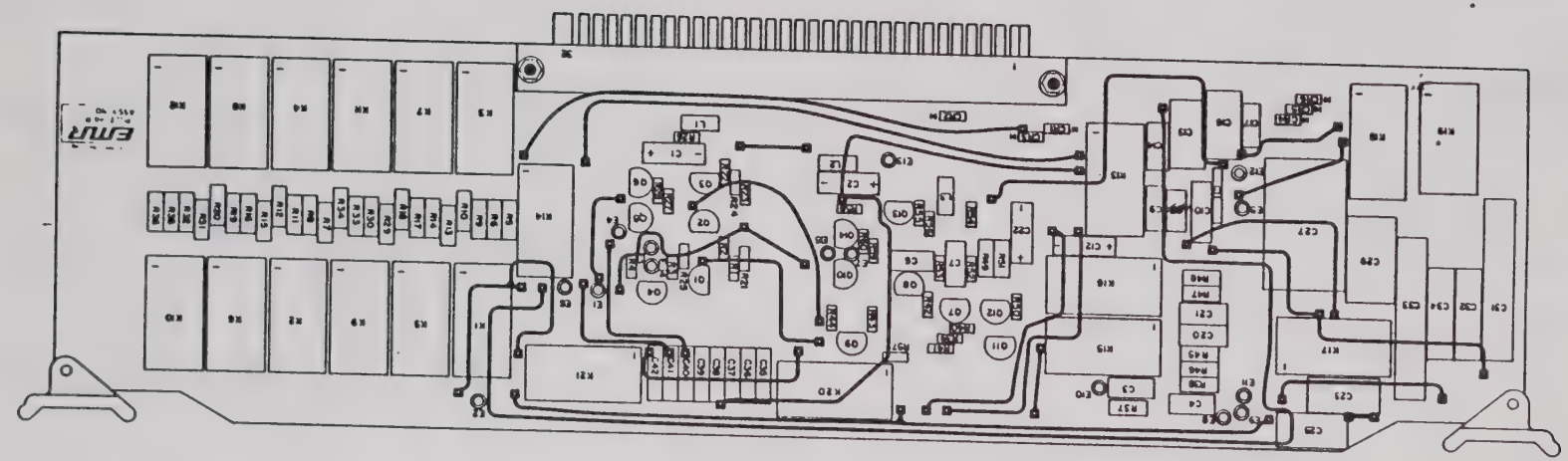

NOTE:
1. EMR DRAWING NO. 7527.

Figure 5-24. LPOF Pole-Pair Printed-Circuit Card A2J14, Location of Components

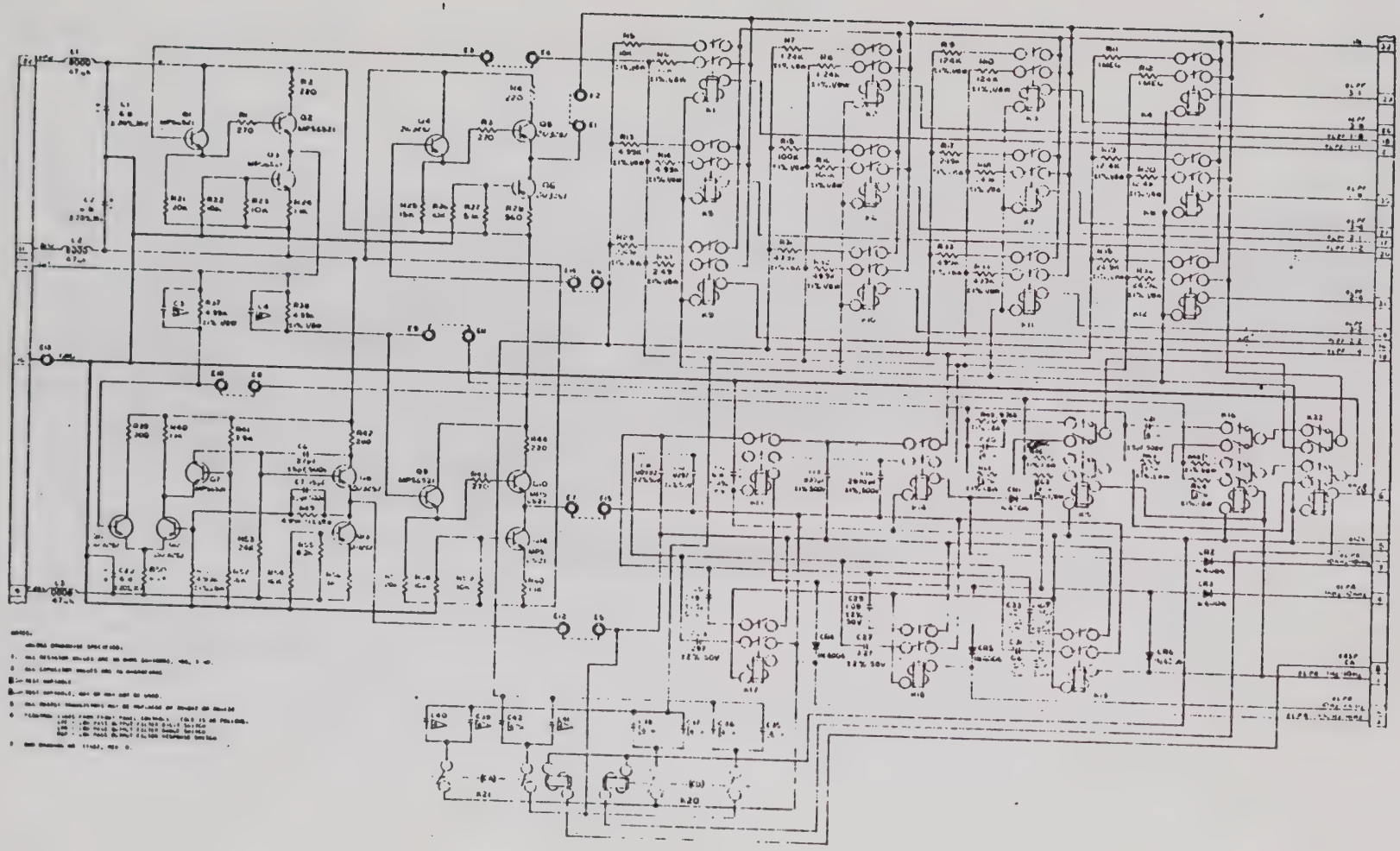

Figure 5-25. LPOF Pole-Pair Printed-Circuit Card A2J14 Schematic Diagram

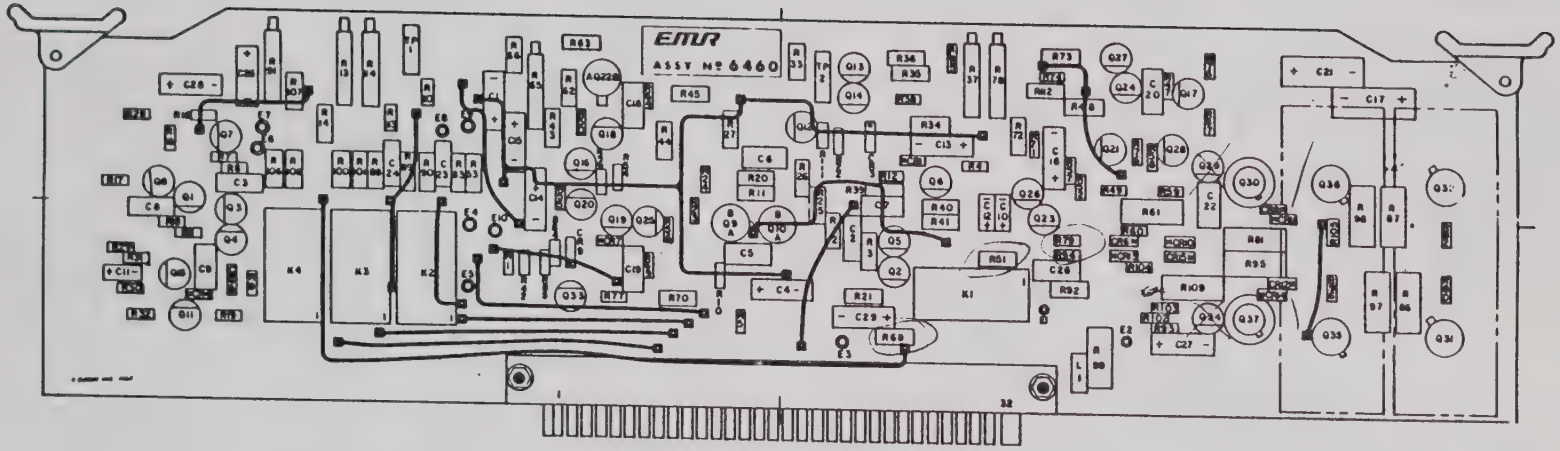

NOTE:
1. EMR DRAWING NO. 6460.

Figure 5-26. Output Printed-Circuit Card A2, J15 Location of Components

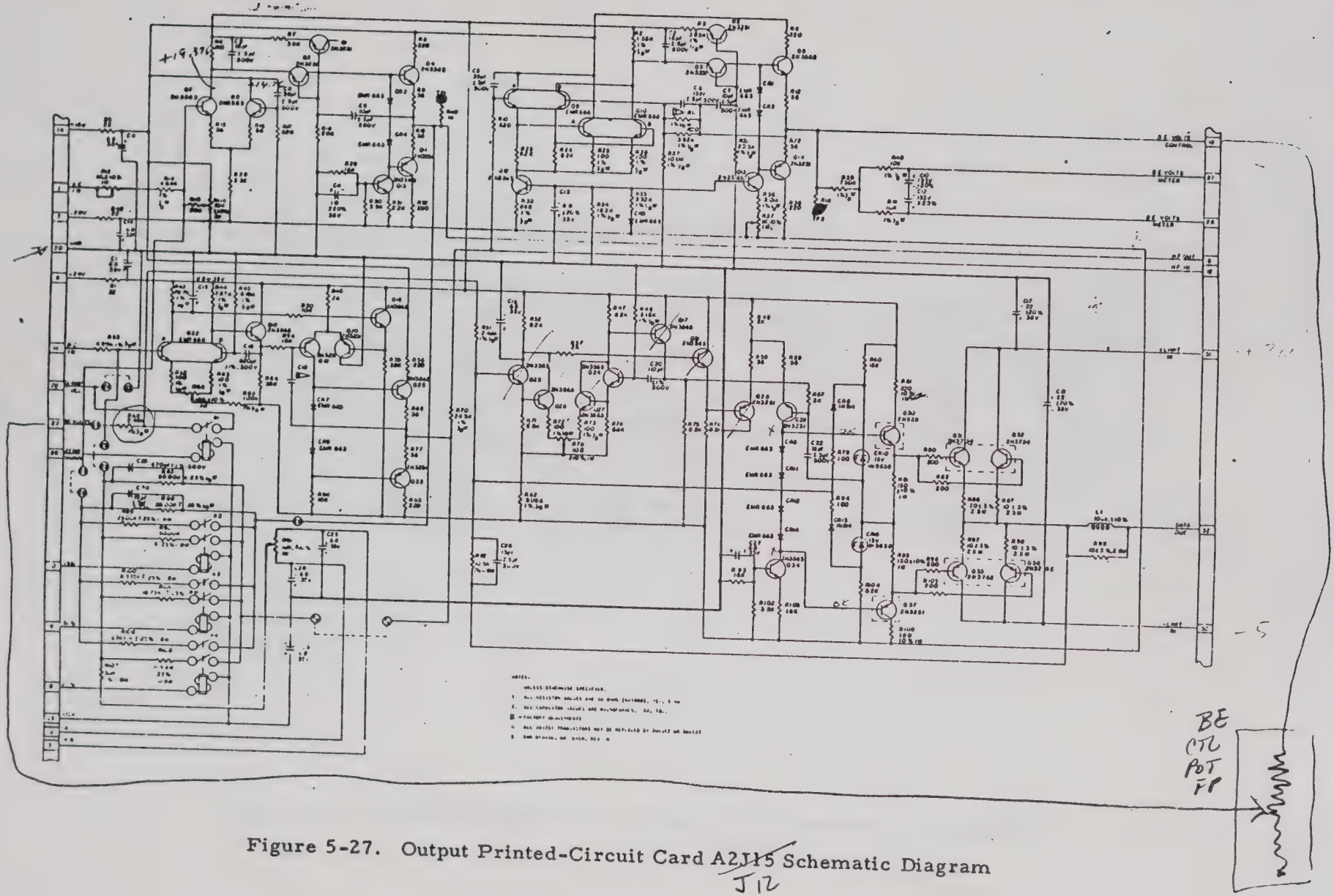

Figure 5-27. Output Printed-Circuit Card A2J15 ~~J15~~ J12 Schematic Diagram

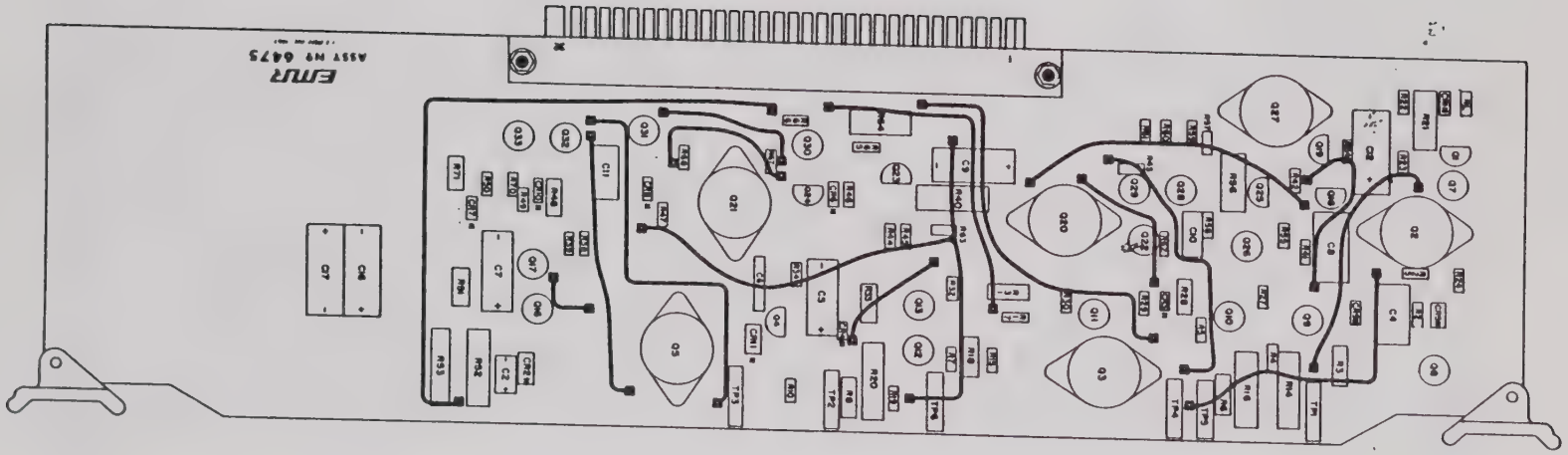

NOTE: 4140-06
1. EMR DRAWING NO. 6675.

Figure 5-28. Regulator Printed-Circuit Card A2J16, Location of Components
A2J13

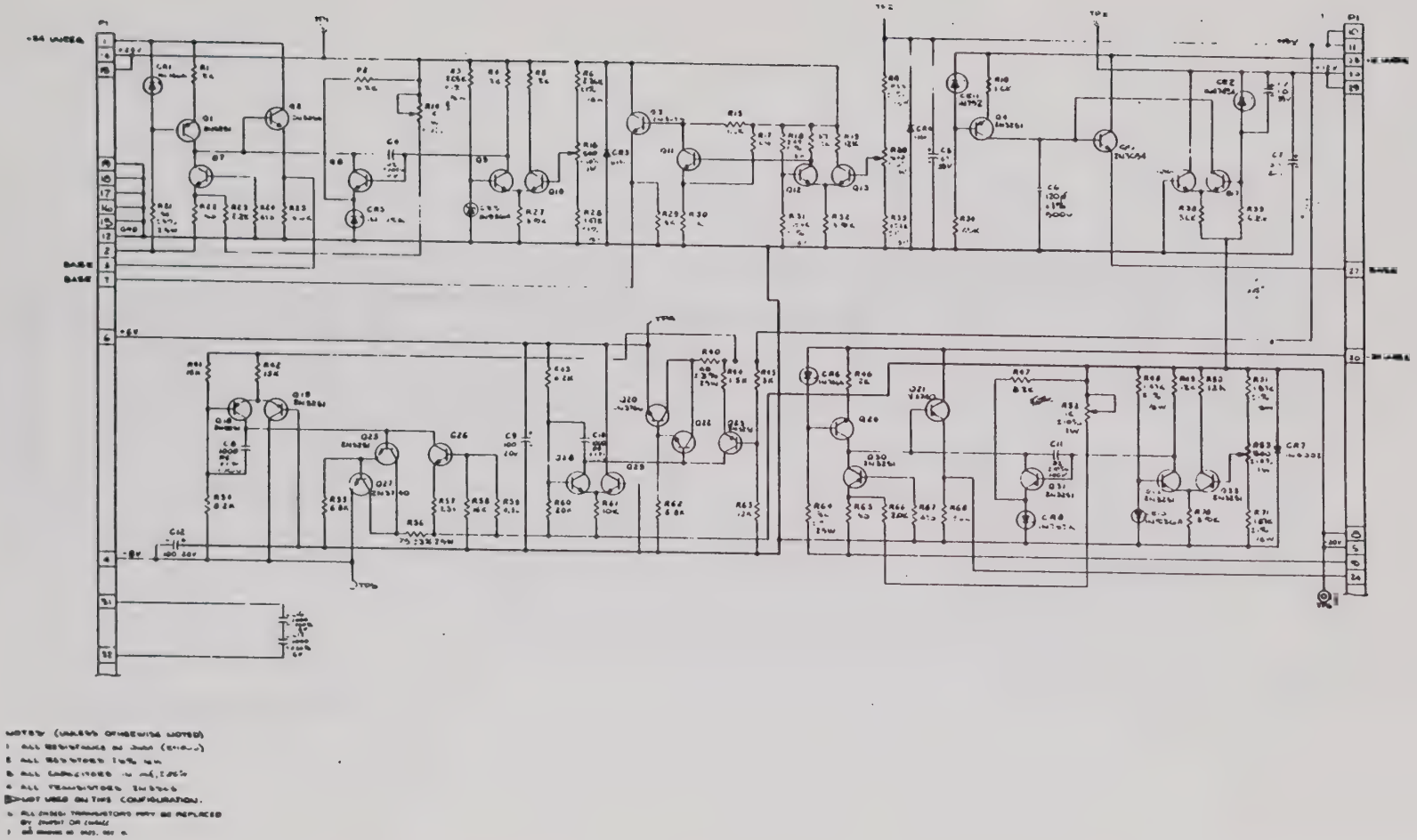

Figure 5-29. Regulator Printed-Circuit Card A2J16 Schematic Diagram

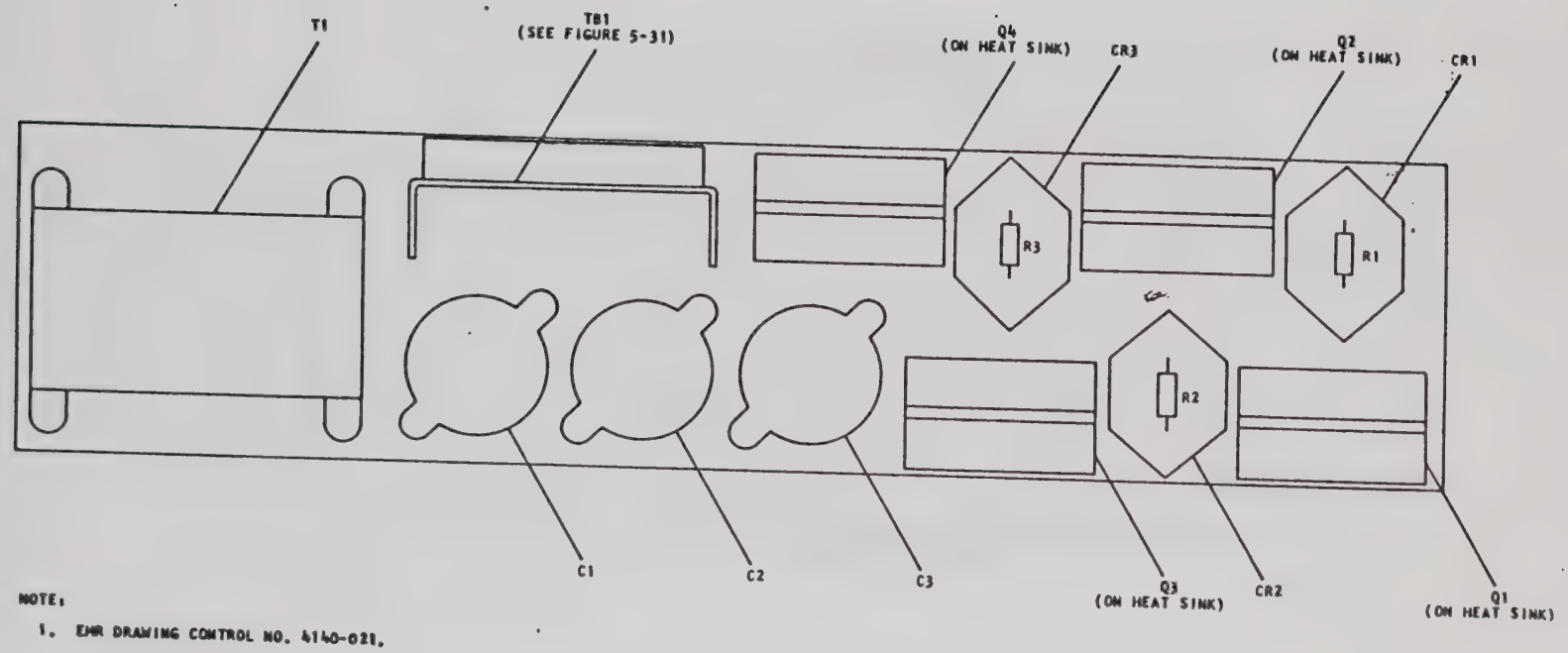

NOTE:

1. EMR DRAWING CONTROL NO. 4140-021.

Figure 5-30. Power Supply Assembly, A4

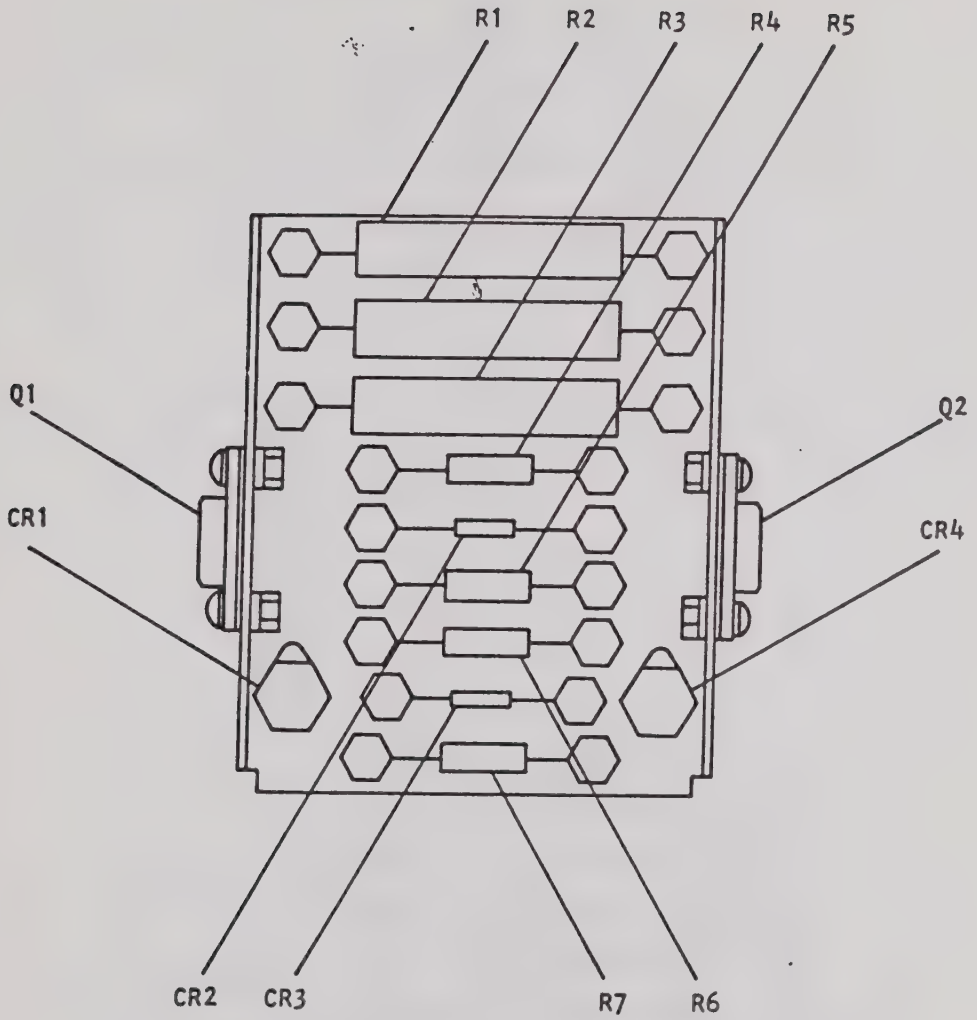

NOTE:

1. EMR DRAWING CONTROL NO. 4140-022.

Figure 5-31. Component Mounting Board A4TB1, Location of Components

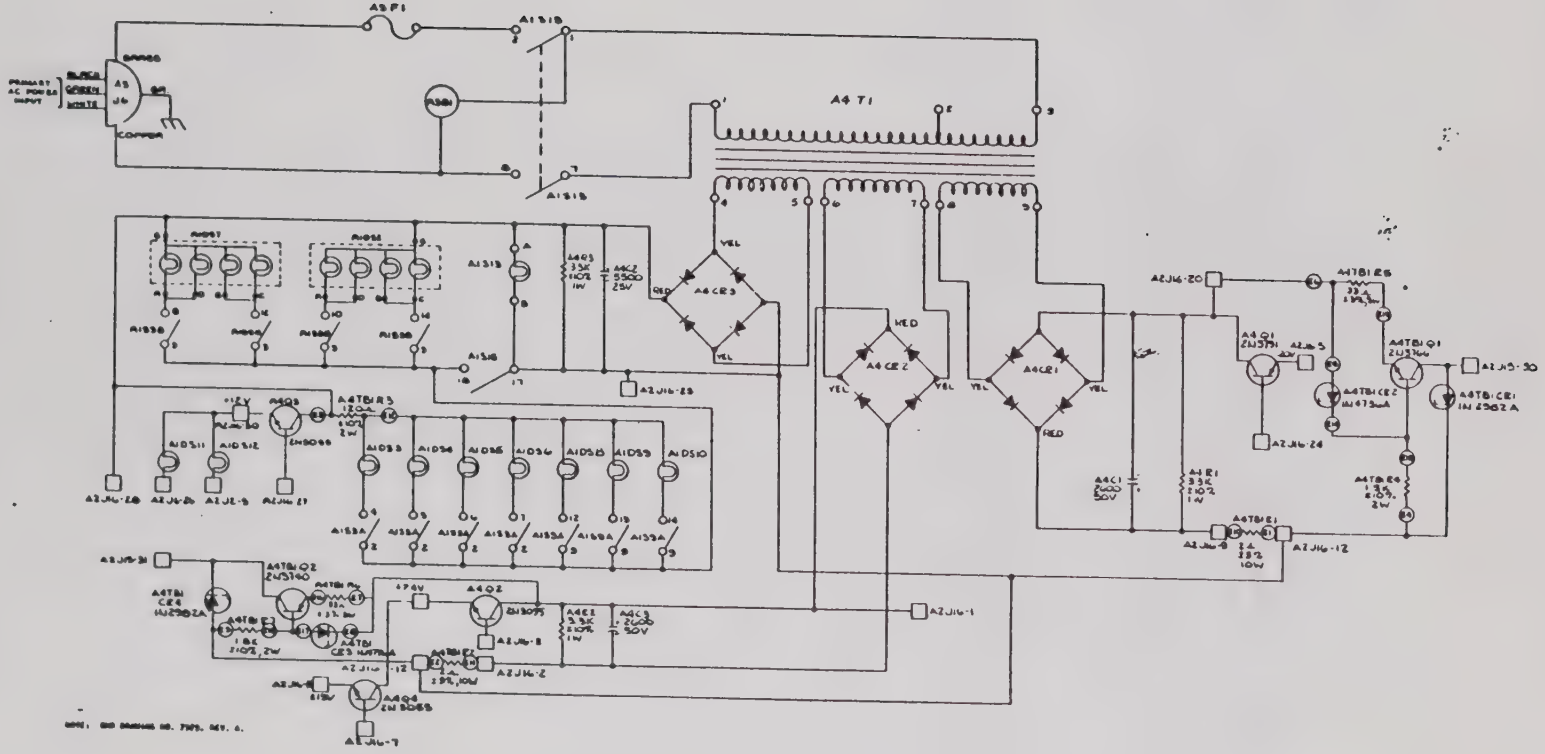

Figure 5-32. Power Supply Assembly, A4, Schematic Diagram

SECTION 6

PARTS LISTS

6.1 GENERAL

This section contains information necessary to identify electronic components for the Model 4140 Programmable Tunable Discriminator. Parts information is presented in tabular form and is keyed to illustrations in Section 5 of this manual. Circuit Symbol No. column identifies the particular assembly or part by its reference designation; the Description column gives a complete description of the item; the Manufacturer column gives the name and manufacturer's part number.

Many components in the parts list tables contain an EMR source control number. These components are identified by an asterisk adjacent to the manufacturer's name in the Name portion of the Manufacturer column. A coded number in the Part No. column references approved vendors in the Approved Vendors List, Table 6-19.

Table 6-1. Model 4140 Programmable Tunable Discriminator Assembly
(Ref. Figure 5-1)

CIRCUIT SYMBOL NO.	DESCRIPTION	MANUFACTURER	
		NAME	PART NO.
	MODEL 4140 PROGRAMMABLE TUNABLE DISCRIMINATOR ASSEMBLY	EMR	6250
A1	FRONT PANEL/SUBPANEL ASSEMBLY (See Table 6-2 for breakdown)	EMR	6247
A2	CARD TRAY ASSEMBLY (See Table 6-3 for breakdown)	EMR	6240
A3	REAR PANEL ASSEMBLY (See Table 6-17 for breakdown)	EMR	6245
A4	POWER SUPPLY ASSEMBLY (See Table 6-18 for breakdown)	EMR	6246

Figure 6-2. Front-Panel/Subpanel Assembly, Parts List (Ref. Figure 5-2)

CIRCUIT SYMBOL NO.	DESCRIPTION	MANUFACTURER	
		NAME	PART NO.
A1	FRONT PANEL/SUBPANEL ASSEMBLY	EMR	6247
DS1	INDICATOR UNIT	EMR	8974
DS3 thru DS6	DECIMAL LITE ASSEMBLY	EMR	7327
DS7	INDICATOR UNIT	EMR	8974-1
DS8 thru DS10	Same as DS3		
DS11 and DS12	LITE, 18V, 40 Ma	Eldema	CFW-22556-07
M1	MICROAMMETER, DC	EMR*	802 (Style 0)
M2	MICROAMMETER, DC	EMR*	802 (Style 9)
R1	POTENTIOMETER, 5Ω ±5%, 3/4W	Clarostat	CM-35065
R2	POTENTIOMETER, 500Ω ±5%, 3/4W	Clarostat	CM-35064
S1	SWITCH	CTS	7632
S2	SWITCH	CTS	7631-1
S3	SWITCH	CTS	7631
S4 thru S6	SWITCH, Thumbwheel	E. E. Co.	Model 802
S7	SWITCH, Modified	EMR	7650
S8	SWITCH, Same as S2		
S9	SWITCH, Same as S3		
S10 and S11	SWITCH, Same as S4		
S12	SWITCH, Same as S7		
S13	SWITCH/INDICATOR	Pendar	B507L256W1-L
TP1 thru TP4	TEST POINT	E. F. Johnson	105-251-1

*Correlate coded number in PART NO. column with approved vendor in Table 6-19.

Table 6-3. Card Tray Assembly, Parts List (Ref. Figure 5-1)

CIRCUIT SYMBOL NO.	DESCRIPTION	MANUFACTURER	
		NAME	PART NO.
A2	CARD TRAY ASSEMBLY	EMR	6240
A2J1	BANDPASS INPUT FILTER #1 PRINTED-CIRCUIT CARD (See Table 6-4 for breakdown)	EMR	6463
A2J2	INPUT PRINTED-CIRCUIT CARD (See Table 6-5 for breakdown)	EMR	6472
A2J3	BANDPASS INPUT FILTER #2 PRINTED-CIRCUIT CARD (See Table 6-6 for breakdown)	EMR	6466
A2J4	TAPE-SPEED COMPENSATION PRINTED-CIRCUIT CARD (See Table 6-7 for breakdown)	EMR	6469
A2J6	LIMITER PRINTED-CIRCUIT CARD (See Table 6-8 for breakdown)	EMR	6445
A2J8	DETECTOR PRINTED-CIRCUIT CARD (See Table 6-9 for breakdown)	EMR	6448
A2J10	VOLTAGE SWITCH PRINTED-CIRCUIT CARD (See Table 6-10 for breakdown)	EMR	6451
A2J11	LOW PASS OUTPUT FILTER SINGLE POLE PRINTED-CIRCUIT CARD (See Table 6-11 for breakdown)	EMR	6457
A2J12	LOW PASS OUTPUT FILTER POLE PAIR PRINTED-CIRCUIT CARD (See Table 6-12 for breakdown)	EMR	7525
A2J13	LOW PASS OUTPUT FILTER POLE PAIR PRINTED-CIRCUIT CARD (See Table 6-13 for breakdown)	EMR	7526
A2J14	LOW PASS OUTPUT FILTER POLE PAIR PRINTED-CIRCUIT CARD (See Table 6-14 for breakdown)	EMR	7527
A2J15	OUTPUT PRINTED-CIRCUIT CARD (See Table 6-15 for breakdown)	EMR	6460
A2J16	REGULATOR PRINTED-CIRCUIT CARD (See Table 6-16 for breakdown)	EMR	6475
A2J17	EXTENDER PRINTED-CIRCUIT CARD	EMR	7553
A2C1 thru A2C20	CAPACITOR, 470 Pf ±2%, 500V	EMR*	600
A2R1	RESISTOR, 1K ±5%, 1/4W	MIL-R-11	RC07GF102J
	CONNECTOR, Receptacle (Mating connector for printed-circuit cards)	Methode	SD-832S

*Correlate coded number in PART NO. column with approved vendor in Table 6-19.

Figure 6-4. Bandpass Input Filter No. 1 Printed-Circuit Card, Parts List (Ref. Figure 5-4)

CIRCUIT SYMBOL NO.	DESCRIPTION	MANUFACTURER	
		NAME	PART NO.
A2J1	BANDPASS INPUT FILTER NO. 1 PRINTED-CIRCUIT CARD	EMR	6463
C1 and C2	CAPACITOR, Factory adjustment, may or may not be used	EMR*	600
C3 and C4	CAPACITOR, 6.8 μf ±20%, 35V	EMR*	601
C5 and C6	CAPACITOR, Same as C1		
C7	CAPACITOR, Same as C3		
C8	CAPACITOR, 15 Pf ±0.5 Pf, 500V	EMR*	600
C10	CAPACITOR, Same as C3		
C12 and C13	CAPACITOR, Same as C1		
C14	CAPACITOR, Factory adjustment	EMR*	601
C15 thru C21	CAPACITOR, Same as C1		
C24 and C25	CAPACITOR, Same as C1		
C27	CAPACITOR, 15 Pf ±0.5 Pf, 500V, nominal value	EMR*	600
C28 and C29	CAPACITOR, Same as C1		
C30	CAPACITOR, 12 Pf ±0.5 Pf, 500V, nominal value	EMR*	600
C31	CAPACITOR, 160 Pf ±1%, 500V, nominal value	EMR*	600
C32	CAPACITOR, 20 Pf ±0.5 Pf, 500V, nominal value	EMR*	600
C33	CAPACITOR, Same as C1		
C34	CAPACITOR, Same as C31		
C35	CAPACITOR, 27 Pf ±0.5 Pf, 500V, nominal value	EMR*	600
C36	CAPACITOR, 3 Pf ±0.5 Pf, 500V, nominal value	EMR*	600
C37	CAPACITOR, 10 Pf ±0.5 Pf, 500V, nominal value	EMR*	600
C38	CAPACITOR, 47 Pf ±0.5 Pf, 500V, nominal value	EMR*	600
C39	CAPACITOR, 50 Pf ±1%, 500V	EMR*	600
C40	CAPACITOR, 0.178 μf ±1%, 100V	Electro-Cube	217A1B1783F
C41	CAPACITOR, 1640 Pf ±1%, 500V, nominal value	EMR*	600
C42	CAPACITOR, 62 Pf ±1%, 500V, nominal value	EMR*	600
C43	CAPACITOR, Same as C1		
C44	CAPACITOR, 0.0162 μf ±1%, 100V	Electro-Cube	217A1B1622F
C45	CAPACITOR, 1380 Pf ±1%, 500V, nominal value	EMR*	600
C46	CAPACITOR, Same as C1		
C47	CAPACITOR, 120 Pf ±1%, 500V	EMR*	600
C48	CAPACITOR, Same as C1		
C49	CAPACITOR, Same as C35		
C52 and C53	CAPACITOR, Same as C3		
C54	CAPACITOR, 1 Pf ±0.5 Pf, 500V, nominal value	EMR*	600
C55	CAPACITOR, Same as C27		
C60	CAPACITOR, 0.137 μf ±1%, 100V	Electro-Cube	217A1B1373F
C61	CAPACITOR, 0.0124 μf ±1%, 100V	Electro-Cube	217A1B1242F
C62 thru C65	CAPACITOR, Same as C1		
C66	CAPACITOR, Same as C3		

*Correlate coded number in PART NO. column with approved vendors in Table 6-19.

Figure 6-4 (Cont'd.). Bandpass Input Filter No. 1 Printed-Circuit Card, Parts List

CIRCUIT SYMBOL NO.	DESCRIPTION	MANUFACTURER	
		NAME	PART NO.
CR1 and CR2	DIODE	Fairchild	1N914
CR3 and CR4	DIODE (1N816)	EMR*	663
CR5	DIODE, Same as CR1		
CR6	DIODE, Same as CR3		
K1 thru K13	RELAY, 2P, 12V	D. Randall	12MC2A
K14 thru K16	RELAY, 3P, 12V	D. Randall	12MC3A
K17	RELAY, Same as K1		
K18 and K19	RELAY, Same as K14		
K20 thru K22	RELAY, Same as K13		
L1 and L2	INDUCTOR	EMR*	956
Q1 and Q2	TRANSISTOR	Motorola	2N6521
Q3 and Q4	TRANSISTOR	Motorola	MPS6522/SPS 2940
Q5 and Q6	TRANSISTOR, Same as Q1		
Q7 and Q8	TRANSISTOR, Same as Q3		
Q9 and Q10	TRANSISTOR	Motorola	MPS6515
Q11	TRANSISTOR, Same as Q3		
Q12 thru Q14	TRANSISTOR, Same as Q9		
Q15	TRANSISTOR, Same as Q3		
R1 and R2	RESISTOR, 22Ω ±5%, 1/4W	MIL-R-11/8	RC07GF220J
R3 and R4	RESISTOR, 1K ±1%, 1/8W	EMR*	625
R5	RESISTOR, 3.6K ±5%, 1/4W	MIL-R-11/8	RC07GF362J
R6	RESISTOR, 50Ω ±5%, 1/4W	MIL-R-11/8	RC07GF511J
R7	RESISTOR, 37Ω ±1%, 1/8W	EMR*	625
R8	RESISTOR, 24K ±5%, 1/4W	MIL-R-11/8	RC07GF243J
R9	RESISTOR, 6.2K ±5%, 1/4W	MIL-R-11/8	RC07GF622J
R10	RESISTOR, 1.8K ±5%, 1/4W	MIL-R-11/8	RC07GF182J
R11 and R12	RESISTOR, 10K ±0.25%, 1/8W	Riedon	SM-5
R13	RESISTOR, 2.2K ±5%, 1/4W	MIL-R-11/8	RC07GF222J
R14	RESISTOR, Same as R1		
R15	RESISTOR, Same as R13		
R16 and R17	RESISTOR, 5.0K ±0.25%, 1/8W	Riedon	SM-5
R18 and R19	RESISTOR, 2.49K ±1%, 1/8W	EMR*	625
R20	RESISTOR, 20K ±5%, 1/4W	MIL-R-11/8	RC07GF203J
R21	RESISTOR, 11K ±5%, 1/4W	MIL-R-11/8	RC07GF113J
R22	RESISTOR, 3.9K ±5%, 1/4W	MIL-R-11/8	RC07GF392J
R23	RESISTOR, 1.2K ±5%, 1/4W	MIL-R-11/8	RC07GF122J
R24	RESISTOR, 16K ±5%, 1/4W	MIL-R-11/8	RC07GF163J
R25	RESISTOR, Same as R5		
R26	RESISTOR, Same as R6		
R27	RESISTOR, 1K ±5%, 1/4W	MIL-R-11/8	RC07GF102J
R28 and R29	RESISTOR, 2.50K ±0.25%, 1/8W	Riedon	SM-5
R30 and R31	RESISTOR, Same as R1		
R32 and R33	RESISTOR, 1.25K ±0.25%, 1/8W	Riedon	SM-5
R34 and R35	RESISTOR, 100K ±1%, 1/8W	EMR*	625
R36 and R37	RESISTOR, 49.9K ±1%, 1/8W	EMR*	625
R38	RESISTOR, Same as R22		
R39	RESISTOR, 1.6K ±5%, 1/4W	MIL-R-11/8	RC07GF162J
R40	RESISTOR, 13K ±5%, 1/4W	MIL-R-11/8	RC07GF133J
R41 and R42	RESISTOR, 24.9K ±1%, 1/8W	EMR*	625
R43	RESISTOR, 220Ω ±5%, 1/4W	MIL-R-11/8	RC07GF221J
R44	RESISTOR, 180Ω ±5%, 1/4W	MIL-R-11/8	RC07GF181J
R45 and R46	RESISTOR, 12.4K ±1%, 1/8W	EMR*	625
R47 and R48	RESISTOR, 10Ω ±5%, 1/4W	MIL-R-11/8	RC07GF100J

*Correlate coded number in PART NO. column with approved vendors in Table 6-19.

Figure 6-4 (Cont'd.). Bandpass Input Filter No. 1 Printed-Circuit Card, Parts List

CIRCUIT SYMBOL NO.	DESCRIPTION	MANUFACTURER	
		NAME	PART NO.
R49	RESISTOR, Factory adjustment, may or may not be used, ±1%, 1/8W	EMR*	625
R50	RESISTOR, 4.64K ±1%, 1/8W	EMR*	625
R51 and R52	RESISTOR, 62Ω ±5%, 1/4W	MIL-R-11/8	RC07GF620J
R53	RESISTOR, Same as R43		
R54	RESISTOR, Same as R18		
R55	RESISTOR, 560Ω ±5%, 1/4W	MIL-R-11/8	RC07GF561J
R56 and R57	RESISTOR, 1M ±5%, 1/4W	MIL-R-11/8	RC07GF105J
R58	RESISTOR, Same as R40		
R59 and R60	RESISTOR, 510K ±5%, 1/4W	MIL-R-11/8	RC07GF514J
R61 and R62	RESISTOR, 240K ±5%, 1/4W	MIL-R-11/8	RC07GF244J
R63 and R64	RESISTOR, 120K ±5%, 1/4W	MIL-R-11/8	RC07GF124J
R65	RESISTOR, 1.47K ±1%, 1/8W	EMR*	625
R66	RESISTOR, 1.91K ±1%, 1/8W	EMR*	625
R67	RESISTOR, 3.40K ±1%, 1/8W	EMR*	625
R68	RESISTOR, 4.99K ±1%, 1/8W	EMR*	625
R69	RESISTOR, 1K ±5%, 1/4W	MIL-R-11/8	RC07GF102J
R70	RESISTOR, 3.3K ±5%, 1/4W	MIL-R-11/8	RC07GF332J
R71	RESISTOR, Same as R1		
R72 and R73	RESISTOR, Same as R49		
R74	RESISTOR, Same as R22		

*Correlate coded number in PART NO. column with approved vendors in Table 6-19.

Table 6-5. Input Printed-Circuit Card, Parts List (Ref. Figure 5-6)

CIRCUIT SYMBOL NO.	DESCRIPTION	MANUFACTURER	
		NAME	PART NO.
A2J2	INPUT PRINTED-CIRCUIT CARD	EMR	6472
C1 thru C10	CAPACITOR, 6.8 μf ±20%, 35V	EMR*	601
C11	CAPACITOR, 1.0 μf ±20%, 35V	EMR*	601
C12	CAPACITOR, Same as C1		
C13	CAPACITOR, Same as C11		
C14	CAPACITOR, 15 Pf ±0.5 Pf, 500V	EMR*	600
C15	CAPACITOR, Same as C1		
C16	CAPACITOR, Factory adjustment, may or may not be used	EMR*	600
C17	CAPACITOR, Same as C1		
C18 and C19	CAPACITOR, 22 μf ±20%, 15V	EMR*	601
C20	CAPACITOR, Same as C11		
C21	CAPACITOR, Same as C1		
C22	CAPACITOR, Same as C11		
C23 thru C25	CAPACITOR, Same as C1		
CR1 thru CR12	DIODE	General Inst.	1N914
K1 thru K8	RELAY	D. Randall	12MC2A
Q1 thru Q3	TRANSISTOR	Motorola	MPS6521
Q4	TRANSISTOR	Texas Inst.	2N1711
Q5 and Q6	TRANSISTOR, Same as Q1		
Q7	TRANSISTOR	Texas Inst.	2N929
Q8 and Q9	TRANSISTOR	Motorola	MPS6522/ SPS2940
Q10	TRANSISTOR, Same as Q4		
Q11 thru Q14	TRANSISTOR, Same as Q1		
Q15	TRANSISTOR, Same as Q8		
Q16 thru Q20	TRANSISTOR, Same as Q1		
Q21 thru Q23	TRANSISTOR, Same as Q8		
Q24	TRANSISTOR, Same as Q1		
Q25	TRANSISTOR	Fairchild	2N3646 or MPS3646
Q26	TRANSISTOR	Fairchild	2N3566
Q27	TRANSISTOR, Same as Q25		
R1	RESISTOR, 2.87K ±1%, 1/8W	EMR*	625
R2	RESISTOR, 1.54K ±1%, 1/8W	EMR*	625
R3	RESISTOR, 5.23K ±1%, 1/8W	EMR*	625
R4	RESISTOR, 2.21K ±1%, 1/8W	EMR*	625
R5 and R6	RESISTOR, 22Ω ±5%, 1/4W	MIL-R-11/8	RC07GF220J
R7	RESISTOR, 24K ±5%, 1/4W	MIL-R-11/8	RC07GF243J
R8 and R9	RESISTOR, Same as R5		
R10	RESISTOR, 1.69K ±1%, 1/8W	EMR*	625
R11	RESISTOR, 243Ω ±1%, 1/8W	EMR*	625
R12	RESISTOR, 1.96K ±1%, 1/8W	EMR*	625
R13	RESISTOR, 576Ω ±1%, 1/8W	EMR*	625
R14	RESISTOR, 3.6K ±5%, 1/4W	MIL-R-11/8	RC07GF362J
R15	RESISTOR, 510Ω ±5%, 1/4W	MIL-R-11/8	RC07GF511J
R16	RESISTOR, Same as R14		
R17	RESISTOR, Same as R15		
R18	RESISTOR, 82K ±5%, 1/4W	MIL-R-11/8	RC07GF823J
R19	RESISTOR, 100Ω ±5%, 1/4W	MIL-R-11/8	RC07GF101J
R20	RESISTOR, 1K ±5%, 1/4W	MIL-R-11/8	RC07GF102J
R21	RESISTOR, 4.99K ±1%, 1/8W	EMR*	625
R22	RESISTOR, 2.2K ±5%, 1/4W	MIL-R-11/8	RC07GF222J
R23	RESISTOR, 2.49K ±1%, 1/8W	EMR*	625
R24	RESISTOR, Same as R22		
R25 and R26	RESISTOR, 470Ω ±5%, 1/4W	MIL-R-11/8	RC07GF471J

*Correlate coded number in PART NO. column with approved vendors in Table 6-19.

Table 6-5 (Cont'd.). Input Printed-Circuit Card, Parts List

CIRCUIT SYMBOL NO.	DESCRIPTION	MANUFACTURER	
		NAME	PART NO.
R27	RESISTOR, Same as R19		
R28	RESISTOR, 100K ±5%, 1/4W	MIL-R-11/8	RC07GF104J
R29	RESISTOR, 18K ±5%, 1/4W	MIL-R-11/8	RC07GF183J
R30	RESISTOR, Same as R15		
R31	RESISTOR, 20K ±5%, 1/4W	MIL-R-11/8	RC07GF203J
R32	RESISTOR, 12K ±5%, 1/4W	MIL-R-11/8	RC07GF123J
R33	RESISTOR, 15K ±5%, 1/4W	MIL-R-11/8	RC07GF153J
R34	RESISTOR, 5.1K ±5%, 1/4W	MIL-R-11/8	RC07GF512J
R35	RESISTOR, 560Ω ±5%, 1/4W	MIL-R-11/8	RC07GF561J
R36	RESISTOR, Same as R31		
R37	RESISTOR, 11K ±5%, 1/4W	MIL-R-11/8	RC07GF113J
R38	RESISTOR, 3.9K ±5%, 1/4W	MIL-R-11/8	RC07GF392J
R39	RESISTOR, 1.2K ±5%, 1/4W	MIL-R-11/8	RC07GF122J
R40	RESISTOR, Same as R31		
R41	RESISTOR, Same as R37		
R42	RESISTOR, Same as R38		
R43	RESISTOR, Same as R39		
R44 thru R47	RESISTOR, Same as R5		
R48	RESISTOR, 7.5K ±5%, 1/4W	MIL-R-11/8	RC07GF752J
R49	RESISTOR, Same as R21		
R50	RESISTOR, 6.2K ±5%, 1/4W	MIL-R-11/8	RC07GF622J
R51	RESISTOR, 1.8K ±5%, 1/4W	MIL-R-11/8	RC07GF182J
R52	RESISTOR, Same as R23		
R53	RESISTOR, Same as R14		
R54	RESISTOR, Same as R15		
R55	RESISTOR, 1K ±5%, 1/4W	MIL-R-11/8	RC07GF102J
R56	RESISTOR, Same as R25		
R57	RESISTOR, Same as R22		
R58	RESISTOR, 1.5K ±5%, 1/4W	MIL-R-11/8	RC07GF152J
R59	RESISTOR, Same as R22		
R60	RESISTOR, 10K ±5%, 1/4W	MIL-R-11/8	RC07GF103J
R61	RESISTOR, Same as R34		
R62	RESISTOR, Same as R60		
R63 and R64	RESISTOR, Same as R34		
R65	RESISTOR, Same as R31		
R66	RESISTOR, Same as R60		
R67	RESISTOR, 27K ±5%, 1/4W	MIL-R-11/8	RC07GF273J
R68	RESISTOR, Same as R14		
R69	RESISTOR, 16K ±5%, 1/4W	MIL-R-11/8	RC07GF163J
R70	RESISTOR, Same as R15		
R71	RESISTOR, Same as R31		
R72	RESISTOR, Same as R37		
R73	RESISTOR, Same as R38		
R74	RESISTOR, Same as R39		
R75	RESISTOR, 665Ω ±1%, 1/8W	EMR*	625
R76	RESISTOR, 15K ±1%, 1/8W	EMR*	625
R77	RESISTOR, 1.78K ±1%, 1/8W	EMR*	625
R78	RESISTOR, Factory adjustment, may or may not be used, ±1%, 1/8W	EMR*	625
R79 and R80	RESISTOR, Same as R5		
R81	RESISTOR, 1.24K ±1%, 1/8W	EMR*	625
R82	RESISTOR, 562Ω ±1%, 1/8W	EMR*	625
R83	RESISTOR, 909Ω ±1%, 1/8W	EMR*	625
R84	RESISTOR, 453Ω ±1%, 1/8W	EMR*	625
R85	RESISTOR, Same as R31	EMR*	625

*Correlate coded number in PART NO. column with approved vendors in Table 6-19.

Table 6-5 (Cont'd.). Input Printed-Circuit Card, Parts List

CIRCUIT SYMBOL NO.	DESCRIPTION	MANUFACTURER	
		NAME	PART NO.
R86	RESISTOR, Same as R25		
R87	RESISTOR, 3.3K ±5%, 1/4W	MIL-R-11/8	RC07GF332J
R88	RESISTOR, Same as R22		
R89	RESISTOR, Same as R60		
R90	RESISTOR, Same as R34		
R91	RESISTOR, Same as R60		
R92	RESISTOR, Same as R22		
R93	RESISTOR, Same as R60		
R94 thru R96	RESISTOR, Same as R22		
R97	RESISTOR, Same as R34		
R98 and R99	RESISTOR, Same as R22		

Table 6-6. Bandpass Input Filter No. 2, Printed-Circuit Card, Parts List (Ref. Figure 5-8)

CIRCUIT SYMBOL NO.	DESCRIPTION	MANUFACTURER	
		NAME	PART NO.
A2J3	BANDPASS INPUT FILTER NO. 2 PRINTED-CIRCUIT CARD	EMR	6466
C1 and C2	CAPACITOR, Factory adjustment, may or may not be used.	EMR*	600
C3 and C4	CAPACITOR, 6.8 µf ±20%, 35V	EMR*	601
C5 and C6	CAPACITOR, Same as C1		
C7	CAPACITOR, Same as C3		
C8	CAPACITOR, 15 Pf ±0.5 Pf, 500V, nominal value	EMR*	600
C10	CAPACITOR, Same as C3		
C11	CAPACITOR, 1 µf ±20%, 35V	EMR*	601
C12 thru C21	CAPACITOR, Same as C1		
C24 and C25	CAPACITOR, Same as C1		
C27	CAPACITOR, Same as C8		
C28 and C29	CAPACITOR, Same as C1		
C30	CAPACITOR, 160 Pf ±1%, 500V, nominal value	EMR*	600
C31	CAPACITOR, 51 Pf ±1%, 500V, nominal value	EMR*	600
C32	CAPACITOR, 120 Pf ±1%, 500V, nominal value	EMR*	600
C33	CAPACITOR, Same as C1		
C34	CAPACITOR, 68 Pf ±1%, 500V, nominal value	EMR*	600
C35	CAPACITOR, Same as C1		
C36	CAPACITOR, 27 Pf ±0.5 Pf, 500V, nominal value	EMR*	600
C37	CAPACITOR, Same as C1		
C38	CAPACITOR, Same as C32		
C39	CAPACITOR, 100 Pf ±1%, 500V, nominal value	EMR*	600
C40	CAPACITOR, 0.269 µf ±1%, 100V (Select component value within 1/2% of value shown)	Electro-Cube	217A1B2693F
C41	CAPACITOR, 2550 Pf ±1%, 500V, nominal value (combine capacitors to obtain value)	EMR*	600
C42	CAPACITOR, Same as C32		
C43	CAPACITOR, Same as C1		
C44	CAPACITOR, 0.0243 µf ±1%, 100V (Select component value within 1/2% of value shown)	Electro-Cube	217A1B2432F
C45	CAPACITOR, 1500 Pf ±1%, 500V, nominal value (combine capacitors to obtain value)	EMR*	600
C46	CAPACITOR, Same as C1		
C47	CAPACITOR, 110 Pf ±1%, 500V, nominal value	EMR*	600
C48 and C49	CAPACITOR, Same as C1		
C52 and C53	CAPACITOR, Same as C3		
C54	CAPACITOR, Same as C1		
C55	CAPACITOR, Same as C8		
C60	CAPACITOR, 0.151 µf ±1%, 100V (Select component value within 1/2% of value shown)	Electro-Cube	217A1B1513F
C61	CAPACITOR, 0.0137 µf ±1%, 100V (Select component value within 1/2% of value shown)	Electro-Cube	217A1B1372F
C62	CAPACITOR, Same as C3		
C63	CAPACITOR, Same as C1		
CR1 and CR2	DIODE	General Inst.	1N914
CR3 and CR4	DIODE (1N816)	EMR*	663
CR5	DIODE, Same as CR1		
CR6	DIODE, Same as CR3		

*Correlate coded number in PART NO. column with approved vendors in Table 6-19.

Table 6-6 (Cont'd.). Bandpass Input Filter No. 2 Printed-Circuit Card, Parts List

CIRCUIT SYMBOL NO.	DESCRIPTION	MANUFACTURER	
		NAME	PART NO.
K1 thru K13	RELAY, 12V	D. Randall	12MC2A
K14 thru K16	RELAY, 12V	D. Randall	12MC3A
K17	RELAY, Same as K1		
K18 and K19	RELAY, Same as K14		
K20 thru K22	RELAY, Same as K1		
L1 and L2	INDUCTOR	EMR*	956
Q1 and Q2	TRANSISTOR	Motorola	MPS6521
Q3 and Q4	TRANSISTOR	Motorola	MPS6522/SPS 2940
Q5 and Q6	TRANSISTOR, Same as Q1		
Q7 and Q8	TRANSISTOR, Same as Q3		
Q9 and Q10	TRANSISTOR	Motorola	MPS6515
Q11	TRANSISTOR, Same as Q3		
Q12 thru Q14	TRANSISTOR, Same as Q9		
Q15	TRANSISTOR, Same as Q3		
R1 and R2	RESISTOR, 22Ω ±5%, 1/4W	MIL-R-11/8	RC07GF220J
R3 and R4	RESISTOR, 1K ±1%, 1/8W	EMR*	625
R5	RESISTOR, 3.6K ±5%, 1/4W	MIL-R-11/8	RC07GF362J
R6	RESISTOR, 510Ω ±5%, 1/4W	MIL-R-11/8	RC07GF511J
R7	RESISTOR, 453Ω ±1%, 1/8W	EMR*	625
R8	RESISTOR, 24K ±5%, 1/4W	MIL-R-11/8	RC07GF243J
R9	RESISTOR, 6.2K ±5%, 1/4W	MIL-R-11/8	RC07GF622J
R10	RESISTOR, 1.8K ±5%, 1/4W	MIL-R-11/8	RC07GF182J
R11 and R12	RESISTOR, 10K ±0.25%, 1/8W	Reidon	SM-5
R13	RESISTOR, 2.2K ±5%, 1/4W	MIL-R-11/8	RC07GF222J
R14	RESISTOR, Same as R1		
R15	RESISTOR, Same as R13		
R16 and R17	RESISTOR, 5.00K ±0.25%, 1/8W	Reidon	SM-5
R18	RESISTOR, 1.27K ±1%, 1/8W	EMR*	625
R19	RESISTOR, 2.49K ±1%, 1/8W	EMR*	625
R20	RESISTOR, 20K ±5%, 1/4W	MIL-R-11/8	RC07GF203J
R21	RESISTOR, 11K ±5%, 1/4W	MIL-R-11/8	RC07GF113J
R22	RESISTOR, 3.9K ±5%, 1/4W	MIL-R-11/8	RC07GF392J
R23	RESISTOR, 1.2K ±5%, 1/4W	MIL-R-11/8	RC07GF122J
R24	RESISTOR, 16K ±5%, 1/4W	MIL-R-11/8	RC07GF163J
R25	RESISTOR, Same as R5		
R26	RESISTOR, Same as R6		
R27	RESISTOR, 1.0K ±5%, 1/4W	MIL-R-11/8	RC07GF102J
R28 and R29	RESISTOR, 2.50K ±0.25%, 1/8W	Reidon	SM-5
R30 and R31	RESISTOR, Same as R1		
R32 and R33	RESISTOR, 1.24K ±1%, 1/8W	EMR*	625
R34 and R35	RESISTOR, 100K ±1%, 1/8W	EMR*	625
R36 and R37	RESISTOR, 49.9K ±1%, 1/8W	EMR*	625
R38	RESISTOR, Same as R22		
R39	RESISTOR, 1.6K ±5%, 1/4W	MIL-R-11/8	RC07GF162J
R40	RESISTOR, 13K ±5%, 1/4W	MIL-R-11/8	RC07GF133J
R41 and R42	RESISTOR, 24.9K ±1%, 1/8W	EMR*	625
R43	RESISTOR, 220Ω ±5%, 1/4W	MIL-R-11/8	RC07GF221J
R45 and R46	RESISTOR, 12.4K ±1%, 1/8W	EMR*	625
R47 and R48	RESISTOR, 10Ω ±5%, 1/4W	MIL-R-11/8	RC07GF100J
R49	RESISTOR, Factory adjustment, may or may not be used; ±1%, 1/8W	EMR*	625
R50	RESISTOR, 3.48K ±1%, 1/8W, nominal value	EMR*	625
R51 and R52	RESISTOR, 62Ω ±5%, 1/4W	MIL-R-11/8	RC07GF620J

*Correlate coded number in PART NO. column with approved vendors in Table 6-19.

Table 6-6 (Cont'd.). Bandpass Input Filter No. 2 Printed-Circuit Card Parts List

CIRCUIT SYMBOL NO.	DESCRIPTION	MANUFACTURER	
		NAME	PART NO.
R53	RESISTOR, 220Ω ±5%, 1/4W	MIL-R-11/8	RC07GF221J
R54	RESISTOR, Same as R19		
R55	RESISTOR, 560Ω ±5%, 1/4W	MIL-R-11/8	RC07GF561J
R56 and R57	RESISTOR, 1 Meg ±5%, 1/4W	MIL-R-11/8	RC07GF105J
R58	RESISTOR, Same as R40		
R59 and R60	RESISTOR, 510K ±5%, 1/4W	MIL-R-11/8	RC07GF514J
R61 and R62	RESISTOR, 240K ±5%, 1/4W	MIL-R-11/8	RC07GF244J
R63 and R64	RESISTOR, 120K ±5%, 1/4W	MIL-R-11/8	RC07GF124J
R65	RESISTOR, 2.00K ±1%, 1/8W	EMR*	625
R66	RESISTOR, Same as R50		
R67	RESISTOR, 7.32K ±1%, 1/8W	EMR*	625
R68	RESISTOR, 10K ±1%, 1/8W	EMR*	625
R69	RESISTOR, Same as R27		
R70	RESISTOR, 3.3K ±5%, 1/4W	MIL-R-11/8	RC07GF332J
R71	RESISTOR, Same as R1		
R72 and R73	RESISTOR, Same as R49		
R74	RESISTOR, Same as R22		

*Correlate coded number in PART NO. column with approved vendors in Table 6-19.

Table 6-7. Tape-Speed-Compensation Printed-Circuit Card, Parts List (Ref. Figure 5-10)

CIRCUIT SYMBOL NO.	DESCRIPTION	MANUFACTURER	
		NAME	PART NO.
A2J4	TAPE-SPEED-COMPENSATION PRINTED-CIRCUIT CARD	EMR	6469
C1	CAPACITOR, 6.8 μf ±20%, 35V	EMR*	601
C2	CAPACITOR, 6.8 μf ±20%, 35V (Used on Models 4140-02, 4140-04, and 4140-06 only)	EMR*	625
C3	CAPACITOR, 27 Pf ±.5 Pf, 500V (Used on Models 4140-02, 4140-04, and 4140-06 only)	EMR*	600
C4	CAPACITOR, 220 Pf ±1%, 500V (Used on Models 4140-02, 4140-04, and 4140-06 only)	EMR*	600
C5	CAPACITOR, Same as C1		
C6	CAPACITOR, 1000 Pf ±1%, 100V	EMR*	600
C7	CAPACITOR, 0.58 μf ±2%, 50V (Used on Models 4140-02, 4140-04, and 4140-06 only)	EMR*	905
C8	CAPACITOR, 0.058 μf ±2%, 50V (Used on Models 4140-02, 4140-04, and 4140-06 only)	EMR*	905
C9	CAPACITOR, 6560 Pf ±1%, 300V (Used on Models 4140-02, 4140-04, and 4140-06 only)	EMR*	600
C10	CAPACITOR, 560 Pf ±1%, 300V (Used on Models 4140-02, 4140-04, and 4140-06 only)	EMR*	600
C11	CAPACITOR, Same as C1		
CR1 thru CR3	DIODE (1N816)	EMR*	663
K1 thru K4	RELAY	D. Randall	12MC2A
K5 thru K12	RELAY (Used on Models 4140-2, 4140-04, and 4140-06 only)	D. Randall	12MC1A
K13	RELAY, Same as K1		
K14 thru K16	RELAY, Same as K5		
K17 thru K20	RELAY, Same as K1		
Q1	TRANSISTOR (Used on Models 4140-02, 4140-04, and 4140-06 only)	Motorola	MPS6522/ SPS2940
Q2 and Q3	TRANSISTOR (Used on Models 4140-02, 4140-04, and 4140-06 only)	Motorola	2N3565
Q4	TRANSISTOR, Same as Q1		
Q5 thru Q8	TRANSISTOR, Same as Q2		
Q9	TRANSISTOR	Motorola	2N3565
Q10	TRANSISTOR, Same as Q1		
Q11	TRANSISTOR, Same as Q2		
Q12	TRANSISTOR	Motorola	MPS6522/- SPS2940
Q13	TRANSISTOR, Same as Q1		
Q14	TRANSISTOR, Same as Q2		
R1	RESISTOR, Factory adjustment, ±1%, 1/8W	EMR*	625
R2	RESISTOR, 49.9K ±1%, 1/8W (Used on Models 4140-02, 4140-04, and 4140-06 only)	EMR*	625
R3	RESISTOR, 22Ω ±5%, 1/4W	MIL-R-11/8	RC07GF220J
R4	RESISTOR, 22Ω ±5%, 1/4W (Used on Models 4140-02, 4140-04, and 4140-06 only)	MIL-R-11/8	RC07GF220J

*Correlate coded number in PART NO. column with approved vendors in Table 6-19.

Table 6-7 (Cont'd.). Tape-Speed-Compensation Printed-Circuit Card, Parts List

CIRCUIT SYMBOL NO.	DESCRIPTION	MANUFACTURER	
		NAME	PART NO.
R5	RESISTOR, 15K ±5%, 1/4W (Used on Models 4140-02, 4140-04, and 4140-06 only)	MIL-R-11/8	RC07GF153J
R6	RESISTOR, 1K ±5%, 1/4W (Used on Models 4140-02, 4140-04, and 4140-06 only)	MIL-R-11/8	RC07GF102J
R7	RESISTOR, 3.9K ±5%, 1/4W (Used on Models 4140-02, 4140-04, and 4140106 only)	MIL-R-11/8	RC07GF392J
R8	RESISTOR, 3K ±5%, 1/4W (Used on Models 4140-02, 4140-04, and 4140-06 only)	MIL-R-11/8	RC07GF302J
R11	RESISTOR, Same as R1		
R12	RESISTOR, 24.9K ±1%, 1/8W (Used on Models 4140-02, 4140-04, and 4140-06 only)	EMR*	625
R13	RESISTOR, Same as R1		
R14	RESISTOR, 12.4K ±1%, 1/8W (Used on Models 4140-02, 4140-04, and 4140-06 only)	EMR*	625
R15	RESISTOR, 3.3K ±5%, 1/4W (Used on Models 4140-02, 4140-04, and 4140-06 only)	MIL-R-11/8	RC07GF332J
R16	RESISTOR, 10K ±1%, 1/8W (Used on Models 4140-02, 4140-04, and 4140-06 only)	EMR*	625
R17	RESISTOR, Same as R5		
R18	RESISTOR, 6.2K ±5%, 1/4W (Used on Models 4140-02, 4140-04, and 4140-06 only)	MIL-R-11/8	RC07GF622J
R19	RESISTOR, 1.8K ±5%, 1/4W (Used on Models 4140-02, 4140-04, and 4140-06 only)	MIL-R-11/8	RC07GF182J
R20	RESISTOR, 20K ±5%, 1/4W (Used on Models 4140-02, 4140-04, and 4140-06 only)	MIL-R-11/8	RC07GF203J
R21	RESISTOR, 220Ω ±5%, 1/4W (Used on Models 4140-02, 4140-04, and 4140-06 only)	MIL-R-11/8	RC07GF221J
R22	RESISTOR, 100K ±5%, 1/4W (Used on Models 4140-02, 4140-04, and 4140-06 only)	MIL-R-11/8	RC07GF104J
R23	RESISTOR, Same as R5		
R24	RESISTOR, Same as R18		
R25	RESISTOR, 2.4K ±5%, 1/4W (Used on Models 4140-02, 4140-04, and 4140-06 only)	MIL-R-11/8	RC07GF242J
R26	POTENTIOMETER, 200Ω ±5%, 1/4W (Used on Models 4140-02, 4140-04, and 4140-06 only)	Clarostat	76JA3-200
R27	RESISTOR, 649Ω ±1%, 1/8W (Used on Models 4140-02, 4140-04, and 4140-06 only)	EMR*	625
R27	RESISTOR, 1K ±1%, 1/8W (Used on Models 4140-01, 4140-03, and 4140-05 only)	EMR*	625
R28	RESISTOR, Same as R7		
R30	RESISTOR, 499K ±1%, 1/8W (Used on Models 4140-02, 4140-04, and 4140-06 only)	EMR*	625

*Correlate coded number in PART NO. column with approved vendors in Table 6-19.

Table 6-7 (Cont'd.). Tape-Speed-Compensation Printed-Circuit Card, Parts List

CIRCUIT SYMBOL NO.	DESCRIPTION	MANUFACTURER	
		NAME	PART NO.
R31	RESISTOR, Same as R3		
R33	RESISTOR, 249K ±1%, 1/8W (Used on Models 4140-02, 4140-04, and 4140-06 only)	EMR*	625
R34	RESISTOR, 8.2K ±5%, 1/4W	MIL-R-11/8	RC07GF822J
R35	RESISTOR, 1K ±5%, 1/4W (Used on Models 4140-02, 4140-04, and 4140-06 only)	MIL-R-11/8	RC07GF102J
R36	RESISTOR, Same as R5		
R38	RESISTOR, 124K ±1%, 1/8W (Used on Models 4140-02, 4140-04, and 4140-06 only)	EMR*	625
R40	RESISTOR, 61.9K ±1%, 1/8W (Used on Models 4140-02, 4140-04, and 4140-06 only)	EMR*	625
R41	RESISTOR, 1K ±5%, 1/4W	MIL-R-11/8	RC07GF102J
R42	RESISTOR, 15K ±5%, 1/4W	MIL-R-11/8	RC07GF153J
R43	RESISTOR, 6.81K ±1%, 1/8W	EMR*	625
R44	RESISTOR, Factory Adjustment, ±1%, 1/8W	EMR*	625
R45	RESISTOR, 14.7K ±1%, 1/8W	EMR*	625
R46	RESISTOR, Same as R6		
R47	RESISTOR, 9.1K ±5%, 1/4W (Used on Models 4140-02, 4140-04, and 4140-06 only)	MIL-R-11/8	RC07GF912J
R48	RESISTOR, Same as R5		
R49	RESISTOR, 10K ±5%, 3/4W (Used on Models 4140-02, 4140-04, and 4140-06 only)	Clarostat	76JA3-10K
R50	RESISTOR, Same as R1		
R51	RESISTOR, 5.1 Meg ±5%, 1/4W (Used on Models 4140-02, 4140-04, and 4140-06 only)	MIL-R-11/8	RC07GF515J
R52	RESISTOR, 40.2K ±1%, 1/8W (Used on Models 4140-02, 4140-04, and 4140-06 only)	EMR*	625
R53	RESISTOR, 1.07K ±1%, 1/8W (Used on Models 4140-02, 4140-04, and 4140-06 only)	EMR*	625
R54	RESISTOR, 8.25K ±1%, 1/8W (Used on Models 4140-02, 4140-04, and 4140-06 only)	EMR*	625
R55	RESISTOR, Same as R52		
R56	RESISTOR, 6.19K ±1%, 1/8W (Used on Models 4140-02, 4140-04, and 4140-06 only)	EMR*	625
R57	RESISTOR, 2.4 Meg ±5%, 1/4W (Used on Models 4140-02, 4140-04, and 4140-06 only)	MIL-R-11/8	RC07GF245J
R59	RESISTOR, 1.2 Meg ±5%, 1/4W (Used on Models 4140-02, 4140-04, and 4140-06 only)	MIL-R-11/8	RC07GF125J
R61	RESISTOR, 620K ±5%, 1/4W (Used on Models 4140-02, 4140-04, and 4140-06 only)	MIL-R-11/8	RC07GF624J

*Correlate coded number in PART NO. column with approved vendors in Table 6-19.

Table 6-7 (Cont'd.). Tape-Speed-Compensation Printed-Circuit Card, Parts List

CIRCUIT SYMBOL NO.	DESCRIPTION	MANUFACTURER	
		NAME	PART NO.
R62	RESISTOR, Factory adjustment, 1%, 1/8W	EMR*	625
R63	RESISTOR, 4.99K ±1%, 1/8W (Used on Models 4140-02, 4140-04, and 4140-06 only)	EMR*	625
R64	RESISTOR, Same as R1		
R65	RESISTOR, Same as R1		
R66	RESISTOR, Same as R1		
R67	RESISTOR, Same as R1		

*Correlate coded number in PART NO. column with approved vendors in Table 6-19.

Table 6-8. Limiter Printed-Circuit Card, Parts List (Ref. Figure 5-12)

CIRCUIT SYMBOL NO.	DESCRIPTION	MANUFACTURER	
		NAME	PART NO.
A2J6	LIMITER PRINTED-CIRCUIT CARD	EMR	6445
C1 and C2	CAPACITOR, 6.8 µf ±20%, 35V	EMR*	601
C3 and C4	CAPACITOR, 220 µf ±20%, 10V	EMR*	601
C5	CAPACITOR, 22 µf ±20%, 15V	EMR*	601
C6	CAPACITOR, 100 µf ±20%, 20V	EMR*	601
C7	CAPACITOR, Same as C5		
C8	CAPACITOR, 10 Pf ±0.5 Pf, 500V	EMR*	600
C9	CAPACITOR, Same as C6		
C10	CAPACITOR, Same as C5		
C11	CAPACITOR, Same as C8		
C12	CAPACITOR, Same as C6		
C13 thru C16	CAPACITOR, Same as C1		
C17	CAPACITOR, Same as C3		
C18	CAPACITOR, Same as C1		
C19 and C20	CAPACITOR, Same as C3		
C21 and C22	CAPACITOR, Same as C1		
C23	CAPACITOR, 220 Pf ±1%, 500V	EMR*	600
C24	CAPACITOR, 27 Pf ±0.5 Pf, 500V	EMR*	600
C25	CAPACITOR, 47 Pf ±0.5 Pf, 500V	EMR*	600
C26	CAPACITOR, Same as C6		
C27	CAPACITOR, 0.1 µf ±10%, 100V	EMR*	809
C28	CAPACITOR, 430 Pf ±1%, 500V	EMR*	600
C29	CAPACITOR, 0.022 µf ±10%, 100V	EMR*	809
C30	CAPACITOR, Same as C3		
C31	CAPACITOR, Same as C1		
C32	CAPACITOR, 1 µf ±20%, 35V	EMR*	601
CR1 thru CR3	DIODE	EMR*	903
CR4 thru CR7	DIODE	General Inst.	1N914
CR8	DIODE	Motorola	1N942A
CR9 and CR10	DIODE, Same as CR4		
CR11	DIODE	Motorola	1N4747A
Q1 thru Q6	TRANSISTOR	Motorola	MPS6521
Q7 thru Q12	TRANSISTOR	Motorola	MPS3646 or 2N3646
Q13	TRANSISTOR	Motorola	MPS6522/ SPS2940
Q14	TRANSISTOR	EMR*	666
Q16	TRANSISTOR	Texas Inst.	2N1711
Q17	TRANSISTOR	Motorola	2N3565
Q18	TRANSISTOR, Same as Q13		
Q19	TRANSISTOR, Same as Q17		
Q20 and Q21	TRANSISTOR, Same as Q13		
Q22 thru Q28	TRANSISTOR, Same as Q17		
Q29	TRANSISTOR	Fairchild	2N3564
Q30 and Q31	TRANSISTOR, Same as Q17		
Q32	TRANSISTOR, Same as Q7		
Q33 and Q34	TRANSISTOR	Fairchild	2N3566
R1	RESISTOR, 1.5K ±5%, 1/4W	MIL-R-11/8	RC07GF152J
R2 and R3	RESISTOR, 100Ω ±5%, 1/4W	MIL-R-11/8	RC07GF101J
R4	RESISTOR, 1.2K ±5%, 1/4W	MIL-R-11/8	RC07GF122J
R5	RESISTOR, 510Ω ±5%, 1/4W	MIL-R-11/8	RC07GF511J
R6	RESISTOR, Same as R2		
R7	RESISTOR, Same as R4		
R8	RESISTOR, Same as R5		

*Correlate coded number in PART NO. column with approved vendor in Table 6-19.

Table 6-8 (Cont'd.) Limiter Printed-Circuit Card, Parts List

CIRCUIT SYMBOL NO.	DESCRIPTION	MANUFACTURER	
		NAME	PART NO.
R9	RESISTOR, Same as R2		
R10	RESISTOR, Same as R4		
R11	RESISTOR, 3.6K ±5%, 1/4W	MIL-R-11/8	RC07GF362J
R12 and R13	RESISTOR, Same as R4		
R14	RESISTOR, 820Ω ±5%, 1/4W	MIL-R-11/8	RC07GF821J
R15	RESISTOR, 10K ±5%, 1/4W	MIL-R-11/8	RC07GF103J
R16 and R17	RESISTOR, 5.1K ±5%, 1/4W	MIL-R-11/8	RC07GF512J
R18	RESISTOR, Same as R2		
R19	RESISTOR, 2.4K ±5%, 1/4W	MIL-R-11/8	RC07GF242J
R20	RESISTOR, Same as R15		
R21	RESISTOR, 7.5K ±5%, 1/4W	MIL-R-11/8	RC07GF752J
R22	RESISTOR, Same as R2		
R23	RESISTOR, Same as R19		
R24	RESISTOR, Same as R15		
R25	RESISTOR, Same as R21		
R26	RESISTOR, Same as R2		
R27	RESISTOR, Same as R19		
R28	RESISTOR, 1.2K ±5%, 1/4W	MIL-R-11/8	RC07GF122J
R29	RESISTOR, 20K ±5%, 1/4W	MIL-R-11/8	RC07GF203J
R30	RESISTOR, 2.7K ±5%, 1/4W	MIL-R-11/8	RC07GF272J
R31	RESISTOR, Same as R29		
R32	RESISTOR, 330Ω ±5%, 1/4W	MIL-R-11/8	RC07GF331J
R33	RESISTOR, 2K ±5%, 1/4W	MIL-R-11/8	RC07GF202J
R34	RESISTOR, 6.2K ±5%, 1/4W	MIL-R-11/8	RC07GF622J
R35	RESISTOR, Same as R30		
R36	RESISTOR, Same as R34		
R37	RESISTOR, 22Ω ±5%, 1/4W	MIL-R-11/8	RC07GF220J
R38	RESISTOR, 3.9K ±5%, 1/4W	MIL-R-11/8	RC07GF392J
R39	RESISTOR, Same as R29		
R40	RESISTOR, Same as R38		
R41	RESISTOR, 3K ±5%, 1/4W	MIL-R-11/8	RC07GF302J
R42	RESISTOR, 15K ±5%, 1/4W	MIL-R-11/8	RC07GF153J
R43 and R44	RESISTOR, 1K ±5%, 1/4W	MIL-R-11/8	RC07GF102J
R45	RESISTOR, Same as R42		
R46	RESISTOR, 3.3K ±5%, 1/4W	MIL-R-11/8	RC07GF332J
R47	RESISTOR, 220Ω ±5%, 1/4W	MIL-R-11/8	RC07GF221J
R48	RESISTOR, Same as R4		
R49	RESISTOR, Same as R16		
R50	RESISTOR, 24K ±5%, 1/4W	MIL-R-11/8	RC07GF243J
R51 and R52	RESISTOR, Same as R46		
R53	RESISTOR, 9.1K ±5%, 1/4W	MIL-R-11/8	RC07GF912J
R54	RESISTOR, 10Ω ±10%, 1/2W	MIL-R-11/3	RC20GF100K
R55	RESISTOR, 2.2K ±5%, 1/4W	MIL-R-11/8	RC07GF222J
R56	RESISTOR, Same as R55		
R57	RESISTOR, Same as R46		
R58	RESISTOR, Same as R29		
R59	RESISTOR, Same as R34		
R60	RESISTOR, 51K ±5%, 1/4W	MIL-R-11/8	RC07GF513J
R61 and R62	RESISTOR, Same as R29		
R63	RESISTOR, Same as R47		
R64	RESISTOR, Same as R53		
R65	RESISTOR, 100K ±5%, 1/4W	MIL-R-11/8	RC07GF104J
R66	RESISTOR, Same as R42		
R67	RESISTOR, Same as R34		

Table 6-8 (Cont'd.). Limiter Printed-Circuit Card, Parts List

CIRCUIT SYMBOL NO.	DESCRIPTION	MANUFACTURER	
		NAME	PART NO.
R68	RESISTOR, Same as R19		
R69	RESISTOR, Same as R38		
R70	RESISTOR, Same as R19		
R71	RESISTOR, 150Ω ±5%, 1/4W	MIL-R-11/8	RC07GF151J
R72	POTENTIOMETER, 5K ±10%, 1W	AMP-Borg Electronic	2600P-502
R73	RESISTOR, Same as R42		
R74	RESISTOR, 6.8K ±5%, 1/4W	MIL-R-11/8	RC07GF682J
R75	RESISTOR, Same as R55		
R76	RESISTOR, 8.2K ±5%, 1/4W	MIL-R-11/8	RC07GF822J
R77	RESISTOR, 750Ω ±1%, 1/8W	EMR*	625
R78	RESISTOR, 4.42K ±1%, 1/8W	EMR*	625
R79 and R80	RESISTOR, Same as R54		

*Correlate coded number in PART NO. column with approved vendor in Table 6-19.

Table 6-9. Detector Printed-Circuit Card, Parts List (Ref. Figure 5-14)

CIRCUIT SYMBOL NO.	DESCRIPTION	MANUFACTURER	
		NAME	PART NO.
A2J8	DETECTOR PRINTED-CIRCUIT CARD	EMR	6448
C3 and C4	CAPACITOR, 50 Pf ±1%, 500V	EMR*	600
C5	CAPACITOR, 22 µf ±20%, 15V	EMR*	601
C8	CAPACITOR, 75 Pf ±1%, 500V	EMR*	600
C9 and C10	CAPACITOR, 82 Pf ±1%, 500V	EMR*	600
C13	CAPACITOR, 43 Pf ±0.5 Pf, 500V	EMR*	600
C14 thru C16	CAPACITOR, Same as C5		
C17 and C18	CAPACITOR, Factory adjustment	EMR*	600
C19 and C20	CAPACITOR, 0.1 µf +100%, -20%, 30V	Centralab	DA-104
C21	CAPACITOR, Same as C5		
C22	CAPACITOR, Same as C8		
C23 and C24	CAPACITOR, Same as C9		
C25	CAPACITOR, 6.8 µf ±20%, 35V	EMR*	601
C26	CAPACITOR, Same as C13		
C27	CAPACITOR, Same as C5		
C28	CAPACITOR, Same as C25		
C29	CAPACITOR, Same as C5		
C30	CAPACITOR, 200 Pf ±1%, 500V	EMR*	600
C31	CAPACITOR, Same as C17		
C32	CAPACITOR, 3200 Pf ±1%, 500V, nominal value	EMR*	600
C33 (a)	CAPACITOR, 0.0351 µf ±1%, 100V	Dearborn	LP7A1B3512F
C33 (b)	CAPACITOR, Factory adjustment	EMR*	600
C34	CAPACITOR, 0.354 µf ±1%, 200V	EMR*	632
C35	CAPACITOR, Same as C30		
C36	CAPACITOR, Same as C17		
C37	CAPACITOR, Same as C32		
C38 (a)	CAPACITOR, Same as C33 (a)		
C38 (b)	CAPACITOR, Same as C33 (b)		
C39	CAPACITOR, Same as C34		
C40	CAPACITOR, Same as C25		
CR2 thru CR6	DIODE	General Inst.	1N914
CR7	DIODE (1N751A)	EMR*	642
CR11 thru CR15	DIODE, Same as CR2		
CR16	DIODE, Same as CR7		
CR17	DIODE	Motorola	1N825
K1 thru K13	RELAY	D. Randall	12MC2A
K15 thru K17	RELAY, Same as K1		
Q1 and Q2	TRANSISTOR	Motorola	MPS6515
Q3	TRANSISTOR	Raytheon	2N3010
Q4	TRANSISTOR	Fairchild	2N3646 or MPS3646
Q5	TRANSISTOR, Same as Q3		
Q6 and Q7	TRANSISTOR	Motorola	MPS6521
Q8	TRANSISTOR, Same as Q1		
Q9	TRANSISTOR	Motorola	MPS6522
Q11 and Q12	TRANSISTOR, Same as Q1		
Q13	TRANSISTOR, Same as Q3		
Q14	TRANSISTOR, Same as Q4		
Q15	TRANSISTOR, Same as Q3		
Q16 and Q17	TRANSISTOR, Same as Q6		
Q18	TRANSISTOR, Same as Q1		
Q19	TRANSISTOR, Same as Q9		

*Correlate coded number in PART NO. column with approved vendors in Table 6-19.

Table 6-9 (Cont'd.). Detector Printed-Circuit Card, Parts List

CIRCUIT SYMBOL NO.	DESCRIPTION	MANUFACTURER	
		NAME	PART NO.
R1 and R2	RESISTOR, Factory adjustment, ±5%, 1/4W	MIL-R-11/8	RC07GF---J
R3 and R4	RESISTOR, 1.625K ±0.25%, 1/8W	Reidon	SM-5
R5 and R6	RESISTOR, 1.33K ±1%, 1/8W	EMR*	625
R7 and R8	RESISTOR, 3.250K ±0.25%, 1/8W	Reidon	SM-5
R9 and R10	RESISTOR, 910Ω ±5%, 1/4W	MIL-R-11/8	RC07GF911J
R11	RESISTOR, 300Ω ±5%, 1/4W	MIL-R-11/8	RC07GF301J
R12 and R13	RESISTOR, 1.3M ±5%, 1/4W	MIL-R-11/8	RC07GF135J
R14 and R15	RESISTOR, 22K ±5%, 1/4W	MIL-R-11/8	RC07GF222J
R16	RESISTOR, 1.5K ±5%, 1/4W	MIL-R-11/8	RC07GF152J
R17 and R18	RESISTOR, 650K ±0.25%, 1/8W	Reidon	SM-5
R19 and R20	RESISTOR, 680Ω ±5%, 1/4W	MIL-R-11/8	RC07GF681J
R21	RESISTOR, 470Ω ±5%, 1/4W	MIL-R-11/8	RC07GF471J
R22 and R23	RESISTOR, 5.1K ±5%, 1/4W	MIL-R-11/8	RC07GF512J
R24	RESISTOR, 2K ±5%, 1/4W	MIL-R-11/8	RC07GF202J
R25	RESISTOR, Same as R22		
R26	RESISTOR, 150Ω ±5%, 1/4W	MIL-R-11/8	RC07GF151J
R27 and R28	RESISTOR, Same as R22		
R29	RESISTOR, 1K ±5%, 1/4W	MIL-R-11/8	RC07GF102J
R30	RESISTOR, Same as R11		
R31 and R32	RESISTOR, 680K ±5%, 1/4W	MIL-R-11/8	RC07GF684J
R33 and R34	RESISTOR, 13K ±0.25%, 1/8W	Reidon	SM-5
R35 and R36	RESISTOR, 330K ±5%, 1/4W	MIL-R-11/8	RC07GF334J
R37 and R38	RESISTOR, 16.2K ±1%, 1/8W	EMR*	625
R39 and R40	RESISTOR, Same as R9		
R41	RESISTOR, Same as R11		
R42	RESISTOR, 2.4K ±5%, 1/4W	MIL-R-11/8	RC07GF242J
R43 and R44	RESISTOR, 160K ±5%, 1/4W	MIL-R-11/8	RC07GF164J
R45 and R46	RESISTOR, Same as R14		
R47	RESISTOR, Same as R16		
R48 and R49	RESISTOR, 32.4K ±1%, 1/8W	EMR*	625
R50 and R51	RESISTOR, Same as R19		
R52 and R53	RESISTOR, 130K ±1%, 1/8W	EMR*	625
R54	RESISTOR, Same as R21		
R55 and R56	RESISTOR, Same as R22		
R57	RESISTOR, Same as R24		
R58	RESISTOR, Same as R22		
R59	RESISTOR, Same as R26		
R60	RESISTOR, Same as R22		
R63	RESISTOR, Same as R11		
R64 and R65	RESISTOR, 64.9K ±1%, 1/8W	EMR*	625
R66 and R67	RESISTOR, 22Ω ±5%, 1/4W	MIL-R-11/8	RC07GF220J
R68	RESISTOR, Same as R22		
R69	RESISTOR, Same as R29		
R71 and R72	RESISTOR, Factory adjustment, ±5%, 1/4W	MIL-R-11/8	RC07GF---J
R76 thru R79	RESISTOR, 10Ω ±5%, 1/4W	MIL-R-11/8	RC07GF100J
R80 thru R85	RESISTOR, Same as R1		

*Correlate coded number in PART NO. column with approved vendors in Table 6-19.

Table 6-10. Voltage Switch Printed-Circuit Card, Parts List
(Ref. Figure 5-16)

CIRCUIT SYMBOL NO.	DESCRIPTION	MANUFACTURER	
		NAME	PART NO.
A2J10	VOLTAGE SWITCH PRINTED-CIRCUIT CARD	EMR	6451
C1	CAPACITOR, 1 μf ±20%, 35V	EMR*	601
C2	CAPACITOR, 100 μf ±20%, 20V	EMR*	601
C3	CAPACITOR, 100 Pf ±1%, 500V	EMR*	600
C4	CAPACITOR, 20 Pf ±.5 Pf, 500V	EMR*	600
C5	CAPACITOR, 6.8 μf ±20%, 35V	EMR*	601
C6	CAPACITOR, 12 Pf ±.5 Pf, 500V	EMR*	600
C7	CAPACITOR, 22 μf ±20%, 15V	EMR*	601
C8	CAPACITOR, 27 Pf ±.5 Pf, 500V	EMR*	600
C9	CAPACITOR, 15 Pf ±.5 Pf, 500V	EMR*	600
C10 and C11	CAPACITOR, 10 Pf ±.5 Pf, 500V	EMR*	600
C12	CAPACITOR, Same as C7		
C13	CAPACITOR, 68 Pf ±1%, 500V	EMR*	600
C14	CAPACITOR, Same as C5		
C15	CAPACITOR, Same as C2		
C16	CAPACITOR, 470 Pf ±1%, 500V	EMR*	600
C17	CAPACITOR, Same as C10		
C18	CAPACITOR, Same as C1		
C19	CAPACITOR, Same as C8		
C20	CAPACITOR, Same as C7		
C21	CAPACITOR, Same as C5		
C22 thru C24	CAPACITOR, Same as C8		
C25 thru C28	CAPACITOR, Same as C5		
C29 and C30	CAPACITOR, Same as C2		
C31	CAPACITOR, 150 Pf ±1%, 500V	EMR*	600
C32	CAPACITOR, 0.02 μf ±10%, 100V	EMR*	809
C33	CAPACITOR, Same as C31		
C34	CAPACITOR, Same as C32		
C35 and C36	CAPACITOR, Same as C10		
C37 and C38	CAPACITOR, Same as C8		
CR1	DIODE	Motorola	1N938A
CR2 thru CR5	DIODE	General Inst.	1N914
CR6	DIODE, Same as CR1		
CR7 and CR8	DIODE, Same as CR2		
CR9	DIODE	EMR*	642
CR10 and CR11	DIODE	EMR*	663
CR12 thru CR15	DIODE, Same as CR2		
CR16	DIODE, Same as CR9		
CR17	DIODE	EMR*	642
CR18	DIODE, Same as CR2		
CR19	DIODE, Same as CR17		
CR20 thru CR23	DIODE, Same as CR2		
K1 thru K4	RELAY	D. Randall	12MC2A
K5	RELAY	D. Randall	12MC1A
K6 and K7	RELAY, Same as K1		
L1 and L2	INDUCTOR, 47 μh	Miller	9210-60
Q1	TRANSISTOR	Motorola	MPS6515
Q2	TRANSISTOR	Motorola	2N3646 or MPS3646
Q3	TRANSISTOR	Motorola	MPS6522/ SPS2940
Q4 and Q5	TRANSISTOR	Motorola	2N3640

*Correlate coded number in PART NO. column with approved vendor in Table 6-19.

Table 6-10 (Cont'd.). Voltage Switch Printed-Circuit Card, Parts List

CIRCUIT SYMBOL NO.	DESCRIPTION	MANUFACTURER	
		NAME	PART NO.
Q6	TRANSISTOR	EMR*	666
Q7	TRANSISTOR	Motorola	MPS6521
Q8 and Q9	TRANSISTOR, Same as Q2		
Q10	TRANSISTOR, Same as Q3		
Q11	TRANSISTOR, Same as Q2		
Q13	TRANSISTOR, Same as Q7		
Q14 and Q15	TRANSISTOR, Same as Q3		
Q16	TRANSISTOR, Same as Q7		
Q17	TRANSISTOR, Same as Q3		
Q18 thru Q21	TRANSISTOR, Same as Q2		
Q22	TRANSISTOR, Same as Q3		
Q23 thru Q28	TRANSISTOR	Motorola	2N3565
Q29 thru Q32	TRANSISTOR	Motorola	2N3564
Q33 thru Q35	TRANSISTOR, Same as Q23		
R1	RESISTOR, 680Ω ±5%, 1/4W	MIL-R-11/8	RC07GF681J
R2	RESISTOR, 390Ω ±5%, 1/4W	MIL-R-11/8	RC07GF391J
R3	RESISTOR, 8.2K ±5%, 1/4W	MIL-R-11/8	RC07GF822J
R4	RESISTOR, 1.2K ±5%, 1/4W	MIL-R-11/8	RC07GF122J
R5	RESISTOR, 1.5K ±5%, 1/4W	MIL-R-11/8	RC07GF152J
R6	RESISTOR, 8.2K ±5%, 1/4W	MIL-R-11/8	RC07GF822J
R7 and R8	RESISTOR, 15K ±1%, 1/8W	EMR*	625
R9	RESISTOR, 2K ±5%, 1/4W	MIL-R-11/8	RC07GF202J
R10	RESISTOR, 6.19K ±1%, 1/8W	EMR*	625
R11 and R12	RESISTOR, 3.3K ±5%, 1/4W	MIL-R-11/8	RC07GF332J
R13	RESISTOR, 10K ±5%, 1/4W	MIL-R-11/8	RC07GF103J
R14	RESISTOR, 470Ω ±5%, 1/4W	MIL-R-11/8	RC07GF471J
R15	RESISTOR, 2.49K ±1%, 1/8W	EMR*	625
R16	RESISTOR, 4.3K ±5%, 1/4W	MIL-R-11/8	RC07GF432J
R17	RESISTOR, 1K ±5%, 1/4W	MIL-R-11/8	RC07GF102J
R18	RESISTOR, Same as R9		
R21	RESISTOR, Same as R14		
R22	RESISTOR, Same as R16		
R23	RESISTOR, Same as R15		
R24	RESISTOR, 56Ω ±5%, 1/4W	MIL-R-11/8	RC07GF560J
R25 and R26	RESISTOR, Same as R17		
R27	RESISTOR, Same as R5		
R28	RESISTOR, 3.6K ±5%, 1/4W	MIL-R-11/8	RC07GF362J
R29	RESISTOR, 100Ω ±10%, 1W	Amphenol	2600P-101
R30	RESISTOR, Same as R24		
R31	RESISTOR, Same as R4		
R32	RESISTOR, 220Ω ±5%, 1/4W	MIL-R-11/8	RC07GF221J
R37	RESISTOR, Same as R24		
R38 and R41	RESISTOR, Same as R1		
R42	RESISTOR, Same as R32		
R43	RESISTOR, Same as R1		
R44	RESISTOR, Same as R2		
R45	RESISTOR, Same as R3		
R46	RESISTOR, Same as R17		
R47	RESISTOR, 20K ±5%, 1/4W	MIL-R-11/8	RC07GF203J
R48	RESISTOR, Same as R15		
R49 and R50	RESISTOR, 6.8K ±5%, 1/4W	MIL-R-11/8	RC07GF682J
R51	RESISTOR, Same as R24		
R52	RESISTOR, Same as R17		
R53 thru R56	RESISTOR, Same as R14		
R57	RESISTOR, Same as R13		

*Correlate coded number in PART NO. column with approved vendor in Table 6-19.

Table 6-10 (Cont'd.). Voltage Switch Printed-Circuit Card, Parts List

CIRCUIT SYMBOL NO.	DESCRIPTION	MANUFACTURER	
		NAME	PART NO.
R58	RESISTOR, Same as R32		
R59 thru R61	RESISTOR, 22Ω ±5%, 1/4W	MIL-R-11/8	RC07GF220J
R62	RESISTOR, 0.402K ±1%, 1/8W	EMR*	625
R63	RESISTOR, 301K ±1%, 1/8W	EMR*	625
R64	RESISTOR, Same as R47		
R65	RESISTOR, 27K ±5%, 1/4W	MIL-R-11/8	RC07GF273J
R66	RESISTOR, 9.1K ±5%, 1/4W	MIL-R-11/8	RC07GF912J
R67	RESISTOR, Same as R47		
R68	RESISTOR, Same as R65		
R69	RESISTOR, Same as R66		
R70	RESISTOR, 274K ±1%, 1/8W	EMR*	625
R71	RESISTOR, 205K ±1%, 1/8W	EMR*	625
R72 and R73	RESISTOR, Same as R17		
R74 and R75	RESISTOR, 4.7K ±5%, 1/4W	MIL-R-11/8	RC07GF472J
R76	RESISTOR, Same as R28		
R77	RESISTOR, 127K ±1%, 1/8W	EMR*	625
R78	RESISTOR, 95.3K ±1%, 1/8W	EMR*	625
R79	RESISTOR, Same as R47		
R80	RESISTOR, Same as R13		
R81	RESISTOR, 6.2K ±5%, 1/4W	MIL-R-11/8	RC07GF622J
R82	RESISTOR, Same as R49		
R83	RESISTOR, Same as R47		
R84	RESISTOR, Same as R13		
R85	RESISTOR, Same as R81		
R86	RESISTOR, Same as R49		
R87	RESISTOR, 18K ±5%, 1/4W	MIL-R-11/8	RC07GF183J
R88	RESISTOR, 100K ±1%, 1/8W	EMR*	625
R89	RESISTOR, 75K ±1%, 1/8W	EMR*	625
R90	RESISTOR, 2.7K ±5%, 1/4W	MIL-R-11/8	RC07GF272J
R91	RESISTOR, Same as R13		
R92 thru R95	RESISTOR, 8.2K ±5%, 1/4W	MIL-R-11/8	RC07GF822J
R96 thru R99	RESISTOR, 200Ω ±5%, 1/4W	MIL-R-11/8	RC07GF201J

*Correlate coded number in PART NO. column with approved vendor in Table 6-19.

Table 6-11. Low-Pass Output Filter Single-Pole Printed-Circuit Card, Parts List (Ref. Figure 5-18)

CIRCUIT SYMBOL NO.	DESCRIPTION	MANUFACTURER	
		NAME	PART NO.
A2J11	LOW-PASS OUTPUT FILTER SINGLE-POLE PRINTED-CIRCUIT CARD	EMR	6457
C1 and C2	CAPACITOR, 22 µf ±20%, 15V	EMR*	601
C3 thru C5	CAPACITOR, 6.8 µf ±20%, 35V	EMR*	601
C6	CAPACITOR, Factory adjustment, may or may not be used		
C7	CAPACITOR, 0.0619 µf ±2%, 50V (Used on Models 4140-05 and 4140-06 only)	EMR*	905
C7	CAPACITOR, 0.0581 µf ±2%, 50V (Used on Models 4140-03 and 4140-04 only)	EMR*	905
C7	CAPACITOR, 0.0500 µf ±2%, 50V (Used on Models 4140-01 and 4140-02 only)	EMR*	905
C8	CAPACITOR, 0.681 µf ±2%, 50V (Used on Models 4140-05 and 4140-06 only)	EMR*	905
C8	CAPACITOR, 0.640 µf ±2%, 50V (Used on Models 4140-03 and 4140-04 only)	EMR*	905
C8	CAPACITOR, 0.550 µf ±2%, 50V (Used on Models 4140-01 and 4140-02 only)	EMR*	905
C9	CAPACITOR, Same as C6		
C10	CAPACITOR, 9.6 µf ±5%, 20V (Used on Models 4140-05 and 4140-06 only)	EMR*	601
C10	CAPACITOR, 10.4 µf ±5%, 20V (Used on Models 4140-03 and 4140-04 only)	EMR*	601
C10	CAPACITOR, 12.0 µf ±5%, 20V (Used on Models 4140-01 and 4140-02 only)	EMR*	601
C11	CAPACITOR, Same as C6		
C12	CAPACITOR, 13.6 µf ±5%, 20V (Used on Models 4140-05 and 4140-06 only)	EMR*	601
C12	CAPACITOR, 13.0 µf ±5%, 20V (Used on Models 4140-03 and 4140-04 only)	EMR*	601
C12	CAPACITOR, 11.9 µf ±5%, 20V (Used on Models 4140-01 and 4140-02 only)	EMR*	601
C13 and C14	CAPACITOR, Same as C6		
C15	CAPACITOR, 0.0427 µf ±2%, 50V (Used on Models 4140-05 and 4140-06 only)	EMR*	905
C15	CAPACITOR, 0.0470 µf ±2%, 50V (Used on Models 4140-03 and 4140-04 only)	EMR*	905
C15	CAPACITOR, 0.0540 µf ±2%, 50V (Used on Models 4140-01 and 4140-02 only)	EMR*	905
C16	CAPACITOR, 0.469 µf ±2%, 50V (Used on Models 4140-05 and 4140-06 only)	EMR*	905
C16	CAPACITOR, 0.517 µf ±2%, 50V (Used on Models 4140-03 and 4140-04 only)	EMR*	905
C16	CAPACITOR, 0.594 µf ±2%, 50V (Used on Models 4140-01 and 4140-02 only)	EMR*	905
C17	CAPACITOR, Factory adjustment, may	EMR*	600
C18	CAPACITOR, Same as C10		
C19	CAPACITOR, Same as C17		
C20	CAPACITOR, Same as C12		
C21	CAPACITOR, Same as C17		
C22	CAPACITOR, 4300 Pf ±1%, 500V (Used on Models 4140-05 and 4140-06 only)	EMR*	600
C22	CAPACITOR, 4700 Pf ±1%, 500V (Used on Models 4140-03 and 4140-04 only)	EMR*	600
C22	CAPACITOR, 5400 Pf ±1%, 300V (Used on Models 4140-01 and 4140-02 only)	EMR*	600
C23	CAPACITOR, Same as C17		

*Correlate coded number in PART NO. column with approved vendors in Table 6-19.

Table 6-11 (Cont'd.). Low-Pass Output Filter Single-Pole Printed-Circuit Card, Parts List

CIRCUIT SYMBOL NO.	DESCRIPTION	MANUFACTURER	
		NAME	PART NO.
C24	CAPACITOR, 6200 Pf ±1%, 300V (Used on Models 4140-05 and 4140-06 only)	EMR*	600
C24	CAPACITOR, 5800 Pf ±1%, 300V (Used on Models 4140-03 and 4140-04 only)	EMR*	600
C24	CAPACITOR, 5000 Pf ±1%, 300V (Used on Models 4140-01 and 4140-02 only)	EMR*	600
C25	CAPACITOR, Same as C17		
C26	CAPACITOR, 560 Pf ±1%, 500V (Used on Models 4140-05 and 4140-06 only)	EMR*	600
C26	CAPACITOR, 510 Pf ±1%, 500V (Used on Models 4140-03 and 4140-04 only)	EMR*	600
C26	CAPACITOR, 470 Pf ±1%, 500V (Used on Models 4140-01 and 4140-02 only)	EMR*	600
C27	CAPACITOR, Factory adjustment	EMR*	600
C28	CAPACITOR, 260 Pf ±1%, 500V (Used on Models 4140-05 and 4140-06 only)	EMR*	600
C28	CAPACITOR, 430 Pf ±1%, 500V (Used on Models 4140-03 and 4140-04 only)	EMR*	600
C28	CAPACITOR, 510 Pf ±1%, 500V (Used on Models 4140-01 and 4140-02 only)	EMR*	600
C29	CAPACITOR, 10 Pf ±0.5 Pf, 500V (Used on Models 4140-05 and 4140-06 only)	EMR*	600
C29	CAPACITOR, 21 Pf ±0.5 Pf, 500V (Used on Models 4140-03 and 4140-04 only)	EMR*	600
C29	CAPACITOR, Factory adjustment (Used on Models 4140-01 and 4140-02 only)	EMR*	600
C30	CAPACITOR, Same as C27		
C31	CAPACITOR, Factory adjustment, ±5%, 500V (Used on Models 4140-03, 4140-04, 4140-05, and 4140-06 only)	EMR*	600
C31	CAPACITOR, 20 Pf ±5%, 500V (Used on Models 4140-01 and 4140-02 only)	EMR*	600
C32	CAPACITOR, 33 Pf ±0.5 Pf, 500V (Used on Models 4140-05 and 4140-06 only)	EMR*	600
C32	CAPACITOR, 21 Pf ±0.5 Pf, 500V (Used on Models 4140-03 and 4140-04 only)	EMR*	600
C32	CAPACITOR, 15 Pf ±0.5 Pf, 500V (Used on Models 4140-01 and 4140-02 only)	EMR*	600
C33	CAPACITOR, Factory adjustment, may or may not be used, ±5%, 500V	EMR*	600
CR1 thru CR6	DIODE	General Inst.	1N914
K1 thru K6	RELAY, 12V	D. Randall	12MC1A
K7 thru K9	RELAY, 12V	D. Randall	12MC2A
K10 thru K15	RELAY, Same as K1		
K16	RELAY, Same as K7		
K17 and K18	RELAY, Same as K1		
K19	RELAY, Same as K7		
Q1 thru Q3	TRANSISTOR	Motorola	MPS6521
Q4	TRANSISTOR	Motorola	MPS6522/-SPS2940
R1	RESISTOR, 4.99K ±1%, 1/8W	EMR*	625
R2	RESISTOR, 22Ω ±5%, 1/4W	MIL-R-11/8	RC07GF220J
R3	RESISTOR, 470Ω ±5%, 1/4W	MIL-R-11/8	RC07GF471J
R4	RESISTOR, 1K ±5%, 1/4W	MIL-R-11/8	RC07GF102J
R5	RESISTOR, 240K ±5%, 1/4W	MIL-R-11/8	RC07GF244J

*Correlate coded number in PART NO. column with approved vendors in Table 6-19.

Table 6-11 (Cont'd.). Low-Pass Output Filter Single-Pole Printed-Circuit Card, Parts List

CIRCUIT SYMBOL NO.	DESCRIPTION	MANUFACTURER	
		NAME	PART NO.
R6	RESISTOR, 510K ±5%, 1/4W	MIL-R-11/8	RC07GF514J
R7	RESISTOR, 3.6K ±5%, 1/4W	MIL-R-11/8	RC07GF362J
R8	RESISTOR, 270Ω ±5%, 1/4W	MIL-R-11/8	RC07GF271J
R9	RESISTOR, 20K ±5%, 1/4W	MIL-R-11/8	RC07GF203J
R10	RESISTOR, 5.1K ±5%, 1/4W	MIL-R-11/8	RC07GF512J
R11	RESISTOR, 820Ω ±5%, 1/4W	MIL-R-11/8	RC07GF821J
R12	RESISTOR, 1 Meg ±5%, 1/4W	MIL-R-11/8	RC07GF105J
R13	RESISTOR, 2 Meg ±5%, 1/4W	MIL-R-11/8	RC07GF205J
R14	RESISTOR, 11K ±5%, 1/4W	MIL-R-11/8	RC07GF113J
R15	RESISTOR, Same as R2		
R16	RESISTOR, 24.9K ±1%, 1/8W	EMR*	625
R17	RESISTOR, 49.9K ±1%, 1/8W	EMR*	625
R18	RESISTOR, 100K ±1%, 1/8W	EMR*	625
R19	RESISTOR, 200K ±1%, 1/8W	EMR*	625
R20	RESISTOR, 2.49K ±1%, 1/8W	EMR*	625
R21	RESISTOR, Same as R1		
R22	RESISTOR, 10K ±1%, 1/8W	EMR*	625
R23	RESISTOR, 20K ±1%, 1/8W	EMR*	625

*Correlate coded number in PART NO. column with approved vendors in Table 6-19.

Table 6-12. Low-Pass Output Filter Pole-Pair Printed-Circuit Card, Parts List (Ref. Figure 5-20)

CIRCUIT SYMBOL NO.	DESCRIPTION	MANUFACTURER	
		NAME	PART NO.
A2J12	LOW-PASS OUTPUT FILTER POLE-PAIR PRINTED-CIRCUIT CARD	EMR	7525
C1 and C2	CAPACITOR, 6.8 µf ±20%, 35V	EMR*	601
C3	CAPACITOR, 15 Pf ±5%, 500V	EMR*	600
C4	CAPACITOR, Factory adjustment	EMR*	600
C5	CAPACITOR, 82 Pf ±1%, 500V (Used on Models 4140-01, 4140-02, 4140-05 and 4140-06 only)	EMR*	600
C5	CAPACITOR, 68 Pf ±1%, 500V (Used on Models 4140-03 and 4140-04 only)	EMR*	600
C6	CAPACITOR, 27 Pf ±5%, 500V	EMR*	600
C7	CAPACITOR, Same as C3		
C8	CAPACITOR, 0.00954 µf ±2%, 50V	EMR*	905
C9	CAPACITOR, Same as C4		
C10	CAPACITOR, 0.0351 µf ±2%, 50V (Used on Models 4140-05 and 4140-06 only)	EMR*	905
C10	CAPACITOR, 0.0297 µf ±2%, 50V (Used on Models 4140-03 and 4140-04 only)	EMR*	905
C10	CAPACITOR, 0.027 µf ±2%, 50V (Used on Models 4140-01 and 4140-02 only)	EMR*	905
C12	CAPACITOR, Same as C1		
C13	CAPACITOR, 950 Pf ±2%, 500V (Used on Models 4140-01, 4140-02, 4140-05 and 4140-06 only)	EMR*	600
C13	CAPACITOR, 890 Pf ±1%, 500V (Used on Models 4140-03 and 4140-04 only)	EMR*	600
C14 and C15	CAPACITOR, Same as C4		
C16	CAPACITOR, 3500 Pf ±2%, 500V (Used on Models 4140-05 and 4140-06 only)	EMR*	600
C16	CAPACITOR, 2950 Pf ±2%, 500V (Used on Models 4140-03 and 4140-04 only)	EMR*	600
C16	CAPACITOR, 2700 Pf ±2%, 500V (Used on Models 4140-01 and 4140-02 only)	EMR*	600
C17	CAPACITOR, Same as C4		
C18	CAPACITOR, 300 Pf ±1%, 500V (Used on Models 4140-05 and 4140-06 only)	EMR*	600
C18	CAPACITOR, 215 Pf ±1%, 500V (Used on Models 4140-03 and 4140-04 only)	EMR*	600
C18	CAPACITOR, 230 Pf ±1%, 500V (Used on Models 4140-01 and 4140-02 only)	EMR*	600
C19 and C20	CAPACITOR, Same as C4		
C21	CAPACITOR, 15 Pf ±0.5 Pf, 500V (Used on on Models 4140-01, 4140-02, 4140-03, and 4140-04 only)	EMR*	600
C21	CAPACITOR. 15 Pf ±.5 Pf. 500V (Used on Models 4140-05 and 4140-06 only)	EMR*	600
C22	CAPACITOR, Same as C1		
C23	CAPACITOR, 0.351 µf ±2%, 50V (Used on Models 4140-05 and 4140-06 only)	EMR*	905
C23	CAPACITOR, 0.297 µf ±2%, 50V (Used on Models 4140-03 and 4140-04 only)	EMR*	905
C23	CAPACITOR, 0.270 µf ±2%, 50V (Used on Models 4140-01 and 4140-02 only)	EMR*	905
C25	CAPACITOR, 0.0954 µf ±2%, 50V	EMR*	905
C27	CAPACITOR, 3.86 µf ±2%, 50V (Used on Models 4140-05 and 4140-06 only)	EMR*	905
C27	CAPACITOR, 3.27 µf ±2%, 50V (Used on Models 4140-03 and 4140-04 only)	EMR*	905

*Correlate coded number in PART NO. column with approved vendor in Table 6-19.

Table 6-12 (Cont'd.). Low-Pass Output Filter Pole-Pair Printed-Circuit Card, Parts List

CIRCUIT SYMBOL NO.	DESCRIPTION	MANUFACTURER	
		NAME	PART NO.
C27	CAPACITOR, 2.97 μf ±2%, 50V (Used on Models 4140-01 and 4140-02 only)	EMR*	905
C29	CAPACITOR, 1.05 μf ±2%, 50V	EMR*	905
C31 thru C34	CAPACITOR, Same as C4		
CR1 thru CR6	DIODE	General Inst.	1N914
K1 thru K19	RELAY, 12V	D. Randall	12MC2A
L1 thru L3	INDUCTOR, 47 μh	Miller	9210-60
Q1 thru Q3	TRANSISTOR	Motorola	MPS6521
Q4 thru Q6	TRANSISTOR	Motorola	MPS6522
Q7	TRANSISTOR, Same as Q1		
Q8	TRANSISTOR, Same as Q4		
Q9 and Q10	TRANSISTOR, Same as Q1		
Q11 thru Q13	TRANSISTOR, Same as Q4		
Q14	TRANSISTOR, Same as Q1		
R1	RESISTOR, 270Ω ±5%, 1/4W	MIL-R-11/8	RC07GF271J
R2	RESISTOR, 220Ω ±5%, 1/4W	MIL-R-11/8	RC07GF221J
R3	RESISTOR, Same as R1		
R4	RESISTOR, Same as R2		
R5 and R6	RESISTOR, 10K ±1%, 1/8W	EMR*	625
R7 and R8	RESISTOR, 1.24K ±1%, 1/8W	EMR*	625
R9 and R10	RESISTOR, 124K ±1%, 1/8W	EMR*	625
R11 and R12	RESISTOR, 1 Meg ±1%, 1/8W	EMR*	625
R13 and R14	RESISTOR, 4.99K ±1%, 1/8W	EMR*	625
R15 and R16	RESISTOR, 100K ±1%, 1/8W	EMR*	625
R17 and R18	RESISTOR, 249K ±1%, 1/8W	EMR*	625
R19 and R20	RESISTOR, 12.4K ±1%, 1/8W	EMR*	625
R21	RESISTOR, 20K ±5%, 1/4W	MIL-R-11/8	RC07GF203J
R22 and R23	RESISTOR, 10K ±5%, 1/4W	MIL-R-11/8	RC07GF103J
R24	RESISTOR, 1.1K ±5%, 1/4W	MIL-R-11/8	RC07GF112J
R25	RESISTOR, 15K ±5%, 1/4W	MIL-R-11/8	RC07GF153J
R26	RESISTOR, Same as R22		
R27	RESISTOR, 5.1K ±5%, 1/4W	MIL-R-11/8	RC07GF512J
R28	RESISTOR, 560Ω ±5%, 1/4W	MIL-R-11/8	RC07GF561J
R29 and R30	RESISTOR, 2.49K ±1%, 1/8W	EMR*	625
R31 and R32	RESISTOR, 49.9K ±1%, 1/8W	EMR*	625
R33 and R34	RESISTOR, 499 K ±1%, 1/8W	EMR*	625
R35 and R36	RESISTOR, 24.9K ±1%, 1/8W	EMR*	625
R37 and R38	RESISTOR, Same as R13		
R39	RESISTOR, 200Ω ±5%, 1/4W	MIL-R-11/8	RC07GF201J
R40	RESISTOR, Same as R24		
R41	RESISTOR, 3.9K ±5%, 1/4W	MIL-R-11/8	RC07GF392J
R42	RESISTOR, Same as R39		
R43	RESISTOR, Same as R1		
R44	RESISTOR, Same as R2		
R45	RESISTOR, 9.31K ±1%, 1/8W (Used on Models 4140-05 and 4140-06 only)	EMR*	625
R45	RESISTOR, 10.2K ±1%, 1/8W (Used on Models 4140-03 and 4140-04 only)	EMR*	625
R45	RESISTOR, 12.1K ±1%, 1/8W (Used on Models 4140-01 and 4140-02 only)	EMR*	625
R46	RESISTOR, 3.16K ±1%, 1/8W (Used on Models 4140-05 and 4140-06 only)	EMR*	625
R46	RESISTOR, 3.57K ±1%, 1/8W (Used on Models 4140-03 and 4140-04 only)	EMR*	625

*Correlate coded number in PART NO. column with approved vendor in Table 6-19.

Table 6-12 (Cont'd.). Low-Pass Output Filter Pole-Pair Printed-Circuit Card, Parts List

CIRCUIT SYMBOL NO.	DESCRIPTION	MANUFACTURER	
		NAME	PART NO.
R46	RESISTOR, 909Ω ±1%, 1/8W (Used on Models 4140-01 and 4140-02 only)	EMR*	625
R47	RESISTOR, 15K ±1%, 1/8W (Used on Models 4140-05 and 4140-06 only)	EMR*	625
R47	RESISTOR, 17K ±1%, 1/8W (Used on Models 4140-01 and 4140-02 only)	EMR*	625
R48	RESISTOR, 523Ω ±1%, 1/8W (Used on Models 4140-05 and 4140-06 only)	EMR*	625
R48	RESISTOR, 232Ω ±1%, 1/8W (Used on Models 4140-03 and 4140-04 only)	EMR*	625
R48	RESISTOR, 2.15K ±1%, 1/8W (Used on Models 4140-01 and 4140-02 only)	EMR*	625
R49	RESISTOR, Same as R13		
R50	RESISTOR, 6.2K ±5%, 1/4W	MIL-R-11/8	RC07GF622J
R51	RESISTOR, Same as R13		
R52	RESISTOR, 16K ±5%, 1/4W	MIL-R-11/8	RC07GF163J
R53	RESISTOR, 24K ±5%, 1/4W	MIL-R-11/8	RC07GF243J
R54	RESISTOR, Same as R52		
R55	RESISTOR, 8.2K ±5%, 1/4W	MIL-R-11/8	RC07GF822J
R56	RESISTOR, 1K ±5%, 1/4W	MIL-R-11/8	RC07GF102J
R57	RESISTOR, Same as R21		
R58 and R59	RESISTOR, Same as R22		
R60	RESISTOR, Same as R24		

*Correlate coded number in PART NO. column with approved vendor in Table 6-19.

Table 6-13. Low-Pass Output Filter Pole-Pair Printed-Circuit Card, Parts List (Ref. Figure 5-22)

CIRCUIT SYMBOL NO.	DESCRIPTION	MANUFACTURER	
		NAME	PART NO.
A2J13	LOW-PASS OUTPUT FILTER POLE-PAIR PRINTED-CIRCUIT CARD (Used on Models 4140-03, 4140-04, 4140-05, and 4140-06 only)	EMR	7526
C1 and C2	CAPACITOR, 6.8 µf ±20%, 35V	EMR*	601
C3	CAPACITOR, 15 Pf ±0.5 Pf, 500V	EMR*	600
C4	CAPACITOR, Factory adjustment, may or may not be used	EMR*	600
C6	CAPACITOR, 27 Pf ±0.5 Pf, 500V	EMR*	600
C7	CAPACITOR, Same as C3		
C8	CAPACITOR, 0.00954 µf ±2%, 50V	EMR*	905
C9	CAPACITOR, Factory adjustment, may or may not be used		
C10	CAPACITOR, 0.027 µf ±2%, 50V (Used on Models 4140-05 and 4140-06 only)	EMR*	905
C10	CAPACITOR, 0.0297 µf ±2%, 50V (Used on	EMR*	905
C12	CAPACITOR, Same as C1		
C13	CAPACITOR, 950 Pf ±1%, 500V (Used on Models 4140-03 and 4140-04 only)	EMR*	600
C14	CAPACITOR, Same as C9		
C16	CAPACITOR, 2680 Pf ±1%, 500V (Used on Models 4140-05 and 4140-06 only)	EMR*	600
C16	CAPACITOR, 2880 Pf ±1%, 500V (Used on Models 4140-03 and 4140-04 only)	EMR*	600
C17	CAPACITOR, Same as C4		
C20 and C21	CAPACITOR, Same as C4		
C22	CAPACITOR, Same as C1		
C23	CAPACITOR, 0.270 µf ±2%, 50V (Used on Models 4140-05 and 4140-06 only)	EMR*	905
C23	CAPACITOR, 0.297 µf ±2%, 50V (Used on Models 4140-03 and 4140-04 only)	EMR*	905
C25	CAPACITOR, 0.0954 µf ±2%, 50V	EMR*	905
C27	CAPACITOR, 2.97 µf ±2%, 50V (Used on Models 4140-05 and 4140-06 only)	EMR*	905
C27	CAPACITOR, 3.27 µf ±2%, 50V (Used on Models 4140-03 and 4140-04 only)	EMR*	905
C29	CAPACITOR, 1.05 µf ±2%, 50V	EMR*	905
C31	CAPACITOR, 30 µf ±5%, 10V (Used on Models 4140-05 and 4140-06 only; this value used when C32 not used)	Kemet or Sprague	K30N10DNS or 151D306 X5010Y2
C31	CAPACITOR, 34 µf ±5%, 10V (Used on Models 4140-03 and 4140-04 only)	Kemet or Sprague	K34N10DNS or 151D346 X5010Y2
C31	CAPACITOR, 28 µf ±5%, 10V (Used on Models 4140-05 and 4140-06 only; trimmer used in parallel with C32)	Kemet or Sprague	K28N10DNS or 151D
C32	CAPACITOR, 1.9 µf ±10%, 20V (Used on Models 4140-05 and 4140-06 only; used as a trimmer in parallel with C31 when C31 is 28 µf)	Kemet or Sprague	K1R9N20KNS or 151D
C33	CAPACITOR, 10.6 µf ±5%, 20V (Used when C34 is not used)	Kemet or Sprague	K10R6N20DNS 151D10R66 X5020Y2
C33	CAPACITOR, 9 µf ±5%, 20V (Used when C34 is used)	Kemet or Sprague	K9N20DNS 151D

*Correlate coded number in PART NO. column with approved vendors in Table 6-19.

Table 6-13 (Cont'd.). Low-Pass Output Filter Pole-Pair Printed-Circuit Card, Parts List

CIRCUIT SYMBOL NO.	DESCRIPTION	MANUFACTURER	
		NAME	PART NO.
C34	CAPACITOR, 1.6 μf ±10%, 20V (Used as a trimmer when C33 is 9 μf)	Kemet or Sprague	K1R6N20KNS 151D
C35 thru C42	CAPACITOR, Factory adjustment		
CR1 thru CR6	DIODE	General Inst.	1N914
K1 thru K21	RELAY, 12V	D. Randall	12MC2A
L1 thru L3	INDUCTOR, 27 μh	Miller	9210-60
Q1 thru Q3	TRANSISTOR	Motorola	MPS6521
Q4 thru Q6	TRANSISTOR	Motorola	MPS6522/-SPS2940
Q7	TRANSISTOR, Same as Q1		
Q8	TRANSISTOR, Same as Q4		
Q9 and Q10	TRANSISTOR, Same as Q1		
Q11 thru Q13	TRANSISTOR, Same as Q4		
Q14	TRANSISTOR, Same as Q1		
R1	RESISTOR, 270Ω ±5%, 1/4W	MIL-R-11/8	RC07GF271J
R2	RESISTOR, 220Ω ±5%, 1/4W	MIL-R-11/8	RC07GF221J
R3	RESISTOR, Same as R1		
R4	RESISTOR, Same as R2		
R5 and R6	RESISTOR, 10.0K ±1%, 1/8W	EMR*	625
R7 and R8	RESISTOR, 1.24K ±1%, 1/8W	EMR*	625
R9 and R10	RESISTOR, 124K ±1%, 1/8W	EMR*	625
R11 and R12	RESISTOR, 1M ±5%, 1/4W	MIL-R-11/8	RC07GF105J
R13 and R14	RESISTOR, 4.99K ±1%, 1/8W	EMR*	625
R15 and R16	RESISTOR, 100K ±1%, 1/8W	EMR*	625
R17 and R18	RESISTOR, 249K ±1%, 1/8W	EMR*	625
R19 and R20	RESISTOR, 12.4K ±1%, 1/8W	EMR*	625
R21	RESISTOR, 20K ±5%, 1/4W	MIL-R-11/8	RC07GF203J
R22 and R23	RESISTOR, 10K ±5%, 1/4W	MIL-R-11/8	RC07GF103J
R24	RESISTOR, 1.1K ±5%, 1/4W	MIL-R-11/8	RC07GF112J
R25	RESISTOR, 15K ±5%, 1/4W	MIL-R-11/8	RC07GF153J
R26	RESISTOR, Same as R22		
R27	RESISTOR, 5.1K ±5%, 1/4W	MIL-R-11/8	RC07GF512J
R28	RESISTOR, 560Ω ±5%, 1/4W	MIL-R-11/8	RC07GF561J
R29 and R30	RESISTOR, 2.49K ±1%, 1/8W	EMR*	625
R31 and R32	RESISTOR, 49.9K ±1%, 1/8W	EMR*	625
R33 and R34	RESISTOR, 499K ±1%, 1/8W	EMR*	625
R35 and R36	RESISTOR, 24.9K ±1%, 1/8W	EMR*	625
R37 and R38	RESISTOR, Same as R13		
R39	RESISTOR, 200Ω ±5%, 1/4W	MIL-R-11/8	RC07GF201J
R40	RESISTOR, Same as R24		
R41	RESISTOR, 3.9K ±5%, 1/4W	MIL-R-11/8	RC07GF392J
R42	RESISTOR, Same as R39		
R43	RESISTOR, Same as R1		
R44	RESISTOR, Same as R2		
R45	RESISTOR, 9.76K ±1%, 1/8W (Used on Models 4140-05 and 4140-06 only)	EMR*	625
R45	RESISTOR, 10.2K ±1%, 1/8W (Used on Models 4140-03 and 4140-04 only)	EMR*	625
R46	RESISTOR, 3.57K ±1%, 1/8W (Used on Models 4140-05 and 4140-06 only)	EMR*	625
R46	RESISTOR, 866Ω ±1%, 1/8W (Used on Models 4140-03 and 4140-04 only)	EMR*	625
R47	RESISTOR, 23.2K ±1%, 1/8W (Used on Models 4140-05 and 4140-06 only)	EMR*	625

*Correlate coded number in PART NO. column with approved vendors in Table 6-19.

Table 6-13 (Cont'd.). Low-Pass Output Filter Pole-Pair Printed-Circuit Card, Parts List

CIRCUIT SYMBOL NO.	DESCRIPTION	MANUFACTURER	
		NAME	PART NO.
R47	RESISTOR, 68.1K ±1%, 1/8W (Used on Models 4140-03 and 4140-04 only)	EMR*	625
R48	RESISTOR, 422Ω ±1%, 1/8W (Used on Models 4140-05 and 4140-06 only)	EMR*	625
R48	RESISTOR, 4.22K ±1%, 1/8W (Used on Models 4140-03 and 4140-04 only)	EMR*	625
R49	RESISTOR, Same as R13		
R50	RESISTOR, 6.2K ±5%, 1/4W	MIL-R-11/8	RC07GF622J
R51	RESISTOR, Same as R13		
R52	RESISTOR, 16K ±5%, 1/4W	MIL-R-11/8	RC07GF163J
R53	RESISTOR, 24K ±5%, 1/4W	MIL-R-11/8	RC07GF243J
R54	RESISTOR, Same as R52		
R55	RESISTOR, 8.2K ±5%, 1/4W	MIL-R-11/8	RC07GF822J
R56	RESISTOR, 1.0K ±5%, 1/4W	MIL-R-11/8	RC07GF102J
R57	RESISTOR, Same as R21		
R58 and R59	RESISTOR, Same as R22		

*Correlate coded number in PART NO. column with approved vendors in Table 6-19.

Table 6-14. Low-Pass Output Filter Pole-Pair Printed-Circuit Card, Parts List (Ref. Figure 5-24)

CIRCUIT SYMBOL NO.	DESCRIPTION	MANUFACTURER	
		NAME	PART NO.
A2J14	LOW-PASS OUTPUT FILTER POLE-PAIR PRINTED-CIRCUIT CARD (Used on Models 4140-05 and 4140-06 only)	EMR	7527
C1 and C2	CAPACITOR, 6.8 µf ±20%, 35V	EMR*	601
C3 and C4	CAPACITOR, Factory adjustment, may or may not be used	EMR*	600
C6	CAPACITOR, 27 Pf ±0.5 Pf, 500V	EMR*	600
C7	CAPACITOR, 15 Pf ±0.5 Pf, 500V	EMR*	600
C8	CAPACITOR, 0.00992 µf ±2%, 500V	EMR*	905
C10	CAPACITOR, 0.0297 µf ±2%, 50V	EMR*	905
C12	CAPACITOR, Same as C1		
C13	CAPACITOR, 990 Pf ±1%, 500V	EMR*	600
C16	CAPACITOR, 2970 Pf ±1%, 500V	EMR*	600
C20 and C21	CAPACITOR, Same as C3		
C22	CAPACITOR, Same as C1		
C23	CAPACITOR, 0.297 µf ±2%, 50V	EMR*	905
C25	CAPACITOR, 0.099 µf ±2%, 50V	EMR*	905
C27	CAPACITOR, 3.27 µf ±2%, 50V	EMR*	905
C29	CAPACITOR, 1.09 µf ±2%, 50V	EMR*	905
C31	CAPACITOR, 34 µf ±5%, 10V	Kemet or Sprague	K34N10DNSor 151D346 X5010Y2
C33	CAPACITOR, 11.0 µf ±5%, 20V	Kemet or Sprague	K11N20DNSor 151D116X 5020Y2
C35 thru C42	CAPACITOR, Factory adjustment		
CR1 thru CR6	DIODE	General Inst.	1N914
K1 thru K21	RELAY, 12V	D. Randall	12MC2A
L1 thru L3	INDUCTOR, 47 µh	J. W. Miller	9210-60
Q1 thru Q3	TRANSISTOR	Motorola	MPS6521
Q4 thru Q6	TRANSISTOR	Motorola	MPS6522/-SPS2940
Q7	TRANSISTOR, Same as Q1		
Q8	TRANSISTOR, Same as Q4		
Q9 and Q10	TRANSISTOR, Same as Q1		
Q11 thru Q13	TRANSISTOR, Same as Q4		
Q14	TRANSISTOR, Same as Q1		
R1	RESISTOR, 270Ω ±5%, 1/4W	MIL-R-11/8	RC07GF271J
R2	RESISTOR, 220Ω ±5%, 1/4W	MIL-R-11/8	RC07GF221J
R3	RESISTOR, Same as R1		
R4	RESISTOR, Same as R2		
R5 and R6	RESISTOR, 10.0K ±1%, 1/8W	EMR*	625
R7 and R8	RESISTOR, 1.24K ±1%, 1/8W	EMR*	625
R9 and R10	RESISTOR, 124K ±1%, 1/8W	EMR*	625
R11 and R12	RESISTOR, 1M ±5%, 1/4W	MIL-R-11/8	RC07GF105J
R13 and R14	RESISTOR, 4.99K ±1%, 1/8W	EMR*	625
R15 and R16	RESISTOR, 100K ±1%, 1/8W	EMR*	625
R17 and R18	RESISTOR, 249K ±1%, 1/8W	EMR*	625
R19 and R20	RESISTOR, 12.4K ±1%, 1/8W	EMR*	625
R21	RESISTOR, 20K ±5%, 1/4W	MIL-R-11/8	RC07GF203J
R22 and R23	RESISTOR, 10K ±5%, 1/4W	MIL-R-11/8	RC07GF103J
R24	RESISTOR, 1.1K ±5%, 1/4W	MIL-R-11/8	RC07GF112J
R25	RESISTOR, 15K ±5%, 1/4W	MIL-R-11/8	RC07GF153J
R26	RESISTOR, Same as R22		
R27	RESISTOR, 5.1K ±5%, 1/4W	MIL-R-11/8	RC07GF512J

*Correlate coded number in PART NO. column with approved vendors in Table 6-19.

Table 6-14 (Con't.). Low-Pass Output Filter Pole-Pair Printed-Circuit Card, Parts List

CIRCUIT SYMBOL NO.	DESCRIPTION	MANUFACTURER	
		NAME	PART NO.
R28	RESISTOR, 560Ω ±5%, 1/4W	MIL-R-11/8	RC07GF561J
R29 and R30	RESISTOR, 2.49K ±1%, 1/8W	EMR*	625
R31 and R32	RESISTOR, 49.9K ±1%, 1/8W	EMR*	625
R33 and R34	RESISTOR, 499K ±1%, 1/8W	EMR*	625
R35 and R36	RESISTOR, 24.9K ±1%, 1/8W	EMR*	625
R37 and R38	RESISTOR, Same as R13		
R39	RESISTOR, 200Ω ±5%, 1/4W	MIL-R-11/8	RC07GF201J
R40	RESISTOR, Same as R24		
R41	RESISTOR, 3.9K ±5%, 1/4W	MIL-R-11/8	RC07GF392J
R42	RESISTOR, Same as R39		
R43	RESISTOR, Same as R1		
R44	RESISTOR, Same as R2		
R45	RESISTOR, 9.76K ±1%, 1/8W	EMR*	625
R46	RESISTOR, 806Ω ±1%, 1/8W	EMR*	625
R48	RESISTOR, 5.49K ±1%, 1/8W	EMR*	625
R49	RESISTOR, Same as R13		
R50	RESISTOR, 6.2K ±5%, 1/4W	MIL-R-11/8	RC07GF622J
R51	RESISTOR, Same as R13		
R52	RESISTOR, 16K ±5%, 1/4W	MIL-R-11/8	RC07GF163J
R53	RESISTOR, 24K ±5%, 1/4W	MIL-R-11/8	RC07GF243J
R54	RESISTOR, Same as R52		
R55	RESISTOR, 8.2K ±5%, 1/4W	MIL-R-11/8	RC07GF822J
R56	RESISTOR, 1.0K ±5%, 1/4W	MIL-R-11/8	RC07GF102J
R57	RESISTOR, Same as R21		
R58 and R59	RESISTOR, Same as R22		
R60	RESISTOR, Same as R24		

*Correlate coded number in PART NO. column with approved vendors in Table 6-19.

Table 6-15. Output Printed-Circuit Card, Parts List (Ref. Figure 5-26)

CIRCUIT SYMBOL NO.	DESCRIPTION	MANUFACTURER	
		NAME	PART NO.
A2J15	OUTPUT PRINTED-CIRCUIT CARD	EMR	6460
C1	CAPACITOR, 6.8 µf ±20%, 35V	EMR*	601
C2 and C3	CAPACITOR, 15 Pf ±.5 Pf, 500V	EMR*	600
C4	CAPACITOR, Same as C1		
C5	CAPACITOR, 39 Pf ±.5 Pf, 500V	EMR*	600
C6	CAPACITOR, Same as C2		
C7	CAPACITOR, 10 Pf ±.5 Pf, 500V	EMR*	600
C8	CAPACITOR, Same as C5		
C9	CAPACITOR, Same as C7		
C10 thru C12	CAPACITOR, 1 µf ±20%, 35V	EMR*	601
C13 thru C16	CAPACITOR, Same as C1		
C17	CAPACITOR, 22 µf ±20%, 35V	EMR*	601
C18	CAPACITOR, 820 Pf ±1%, 300V	EMR*	600
C19	CAPACITOR, Factory adjustment	EMR*	600
C20	CAPACITOR, 110 Pf ±1%, 500V	EMR*	600
C21	CAPACITOR, Same as C17		
C22	CAPACITOR, Same as C2		
C23	CAPACITOR, 470 Pf ±1%, 500V	EMR*	600
C24	CAPACITOR, Same as C2		
C25	CAPACITOR, Same as C1		
C26	CAPACITOR, Same as C2		
C27 thru C29	CAPACITOR, Same as C1		
CR1 thru CR5	DIODE	EMR*	663
CR6	DIODE	General Inst.	1N914
CR7 thru CR9	DIODE, Same as CR1		
CR10	DIODE, 15V ±5%, 400 Mw	Motorola	1N965B
CR11 and CR12	DIODE, Same as CR1		
CR13	DIODE, Same as CR6		
CR14	DIODE, Same as CR1		
CR15	DIODE, Same as CR10		
K1	RELAY	D. Randall	12MC1A
K2 thru K4	RELAY	D. Randall	12MC2A
L1	INDUCTOR, 10 µh ±10%, 200 Ma	Miller	9330-24
Q1 thru Q3	TRANSISTOR	Motorola	MPS6522/ SPS 2940
Q4	TRANSISTOR	Motorola	MPS6521
Q5	TRANSISTOR, Same as Q1		
Q6 thru Q8	TRANSISTOR, Same as Q4		
Q9 and Q10	TRANSISTOR	EMR*	666
Q11	TRANSISTOR, Same as Q1		
Q12 and Q13	TRANSISTOR	Motorola	2N3565
Q14	TRANSISTOR, Same as Q1		
Q15 and Q16	TRANSISTOR, Same as Q12		
Q17	TRANSISTOR, Same as Q4		
Q18	TRANSISTOR, Same as Q12		
Q19 and Q20	TRANSISTOR, Same as Q1		
Q21	TRANSISTOR, Same as Q4		
Q22	TRANSISTOR, Same as Q9		
Q23 thru Q27	TRANSISTOR, Same as Q4		
Q28 and Q29	TRANSISTOR, Same as Q1		
Q30	TRANSISTOR	Texas Inst.	2N929
Q31 and Q32	TRANSISTOR	Motorola	2N3734
Q33	TRANSISTOR, Same as Q1		
Q34	TRANSISTOR, Same as Q12		

*Correlate coded number in PART NO. column with approved vendor in Table 6-19.

Table 6-15 (Cont'd.). Output Printed-Circuit Card, Parts List

CIRCUIT SYMBOL NO.	DESCRIPTION	MANUFACTURER	
		NAME	PART NO.
Q35 and Q36	TRANSISTOR	Motorola	2N3762
Q37	TRANSISTOR	Motorola	2N3251
R1	RESISTOR, 22Ω ±5%, 1/4W	MIL-R-11/8	RC07GF220J
R2	RESISTOR, 1.33K ±1%, 1/8W	EMR*	625
R3	RESISTOR, 3.83K ±1%, 1/8W	EMR*	625
R4	RESISTOR, 220Ω ±5%, 1/4W	MIL-R-11/8	RC07GF221J
R5	RESISTOR, Same as R1		
R6	RESISTOR, 910Ω ±5%, 1/4W	MIL-R-11/8	RC07GF911J
R7	RESISTOR, 3.9K ±5%, 1/4W	MIL-R-11/8	RC07GF392J
R8	RESISTOR, Same as R4		
R9	RESISTOR, 56Ω ±5%, 1/4W	MIL-R-11/8	RC07GF560J
R10	RESISTOR, 620Ω ±5%, 1/4W	MIL-R-11/8	RC07GF621J
R11	RESISTOR, Factory adjustment, ±1%, 1/8W	EMR*	625
R12	RESISTOR, Same as R9		
R13	POTENTIOMETER, 1K ±10%, 1W	Amphenol	2600P-102
R14	RESISTOR, 4.64K ±1%, 1/8W	EMR*	625
R15 and R16	RESISTOR, Same as R9		
R17	RESISTOR, 820Ω ±5%, 1/4W	MIL-R-11/8	RC07GF821J
R18	RESISTOR, 20K ±5%, 1/4W	MIL-R-11/8	RC07GF203J
R19	RESISTOR, Same as R9		
R20	RESISTOR, 3.92K ±1%, 1/8W	EMR*	625
R21	RESISTOR, 20.5K ±1%, 1/8W	EMR*	625
R22	RESISTOR, Same as R9		
R23 and R24	RESISTOR, 8.2K ±5%, 1/4W	MIL-R-11/8	RC07GF822J
R25 and R26	RESISTOR, 100Ω ±1%, 1/8W	EMR*	625
R27	RESISTOR, 10K ±1%, 1/8W	EMR*	625
R28	RESISTOR, 3.3K ±5%, 1/4W	MIL-R-11/8	RC07GF332J
R29	RESISTOR, 16K ±5%, 1/4W	MIL-R-11/8	RC07GF163J
R30	RESISTOR, Same as R7		
R31	RESISTOR, 2.2K ±5%, 1/4W	MIL-R-11/8	RC07GF222J
R32	RESISTOR, Same as R4		
R33	RESISTOR, 866Ω ±1%, 1/8W	EMR*	625
R34	RESISTOR, 16.2K ±1%, 1/8W	EMR*	625
R35	RESISTOR, 3.32K ±1%, 1/8W	EMR*	625
R36	RESISTOR, 3.01K ±1%, 1/8W	EMR*	625
R37	RESISTOR, Same as R13		
R38	RESISTOR, Same as R4		
R39	RESISTOR, Same as R21		
R40 and R41	RESISTOR, Same as R27		
R42	RESISTOR, Same as R1		
R43 and R44	RESISTOR, 78.7K ±1%, 1/8W	EMR*	625
R45	RESISTOR, 6.19K ±1%, 1/8W	EMR*	625
R46	RESISTOR, 2K ±5%, 1/4W	MIL-R-11/8	RC07GF202J
R47	RESISTOR, Same as R23		
R48	RESISTOR, 3.16K ±1%, 1/8W	EMR*	625
R49	RESISTOR, Same as R46		
R50	RESISTOR, 10K ±5%, 1/4W	MIL-R-11/8	RC07GF103J
R51	RESISTOR, 2.49K ±1%, 1/8W	EMR*	625
R52	RESISTOR, Same as R23		
R53	RESISTOR, 4.99K ±1%, 1/8W	EMR*	625
R54	RESISTOR, Same as R50		
R55	RESISTOR, 39K ±5%, 1/4W	MIL-R-11/8	RC07GF393J
R56	RESISTOR, Same as R4		
R57	RESISTOR, Same as R46		

*Correlate coded number in PART NO. column with approved vendor in Table 6-19.

Table 6-15 (Cont'd.). Output Printed-Circuit Card, Parts List

CIRCUIT SYMBOL NO.	DESCRIPTION	MANUFACTURER	
		NAME	PART NO.
R58 and R59	RESISTOR, Same as R9		
R60	RESISTOR, 12K ±5%, 1/4W	MIL-R-11/8	RC07GF123J
R61	RESISTOR, 220Ω ±10%, 1W	Allen Bradley	RC32GF221K
R62 and R63	RESISTOR, Same as R25		
R64	RESISTOR, Same as R55		
R65	POTENTIOMETER, 100Ω ±1%, 1W	Amphenol	2600P-101
R66	RESISTOR, 100K ±1%, 1/8W	EMR*	625
R67	RESISTOR, Same as R46		
R68	RESISTOR, Same as R51		
R69	RESISTOR, Same as R9		
R70	RESISTOR, 24.9K ±1%, 1/8W	EMR*	625
R71	RESISTOR, 6.8K ±5%, 1/4W	MIL-R-11/8	RC07GF682J
R72 and R73	RESISTOR, Same as R25		
R74	RESISTOR, Same as R71		
R75 and R76	RESISTOR, Same as R23		
R77	RESISTOR, Same as R9		
R78	RESISTOR, Same as R65		
R79	RESISTOR, 100Ω ±5%, 1/4W	MIL-R-11/8	RC07GF101J
R80	RESISTOR, 200Ω ±5%, 1/4W	MIL-R-11/8	RC07GF201J
R81	RESISTOR, 150Ω ±10%, 1W	MIL-R-11/8	RC32GF151K
R82	RESISTOR, Same as R80		
R83	RESISTOR, 50K ±0.25%, 1/8W	Riedon	SM-5
R84	RESISTOR, Same as R50		
R85	RESISTOR, Same as R4		
R86 and R87	RESISTOR, 10Ω ±.25%, 2.5W	EMR*	621
R88 and R89	RESISTOR, 25K ±0.25%, 1/8W	Riedon	SM-5
R90	RESISTOR, Same as R83		
R91	POTENTIOMETER, 10K ±10%, 1W	Amphenol	2600P103
R92	RESISTOR, 10.5K ±.25%, 1/8W	EMR*	625
R93	RESISTOR, Same as R29		
R94	RESISTOR, Same as R79		
R95	RESISTOR, Same as R81		
R96	RESISTOR, Same as R80		
R97 thru R99	RESISTOR, Same as R86		
R100	RESISTOR, 8.335K ±0.25%, 1/8W	Riedon	SM-5
R101	RESISTOR, 16.67K ±.25%, 1/8W	Riedon	SM-5
R102	RESISTOR, Same as R7		
R103	RESISTOR, 1.6K ±5%, 1/4W	MIL-R-11/8	RC07GF162J
R104	RESISTOR, Same as R23		
R105	RESISTOR, Same as R80		
R106	RESISTOR, 5.765K ±0.25%, 1/8W	Riedon	SM-5
R107	RESISTOR, 51.1K ±1%, 1/8W	EMR*	625
R108	RESISTOR, 11.53K ±0.25%, 1/8W	Riedon	SM-5
R109	RESISTOR, 180Ω ±10%, 1W	MIL-R-11/6	RC32GF181K
R110 and R111	RESISTOR, 1K ±5%, 1/4W	MIL-R-11/8	RC07GF102J
R112	RESISTOR, 9.09K ±1%, 1/8W	EMR*	625
R113	RESISTOR, 20K ±5%, 1/4W	MIL-R-11/8	RC07GF203J
R114	RESISTOR, Same as R91		

*Correlate coded number in PART NO. column with approved vendor in Table 6-19.

Table 6-16. Regulator Printed-Circuit Card, Parts List (Ref. Figure 5-28)

CIRCUIT SYMBOL NO.	DESCRIPTION	MANUFACTURER	
		NAME	PART NO.
A2J16	REGULATOR PRINTED-CIRCUIT CARD	EMR	6475
C2	CAPACITOR, 1 µf ±20%, 35V	EMR*	601
C4	CAPACITOR, 0.02 µf ±10%, 100V	EMR*	809
C5	CAPACITOR, 47 µf ±20%, 35V	EMR*	601
C6	CAPACITOR, 120 Pf ±1%, 500V	EMR*	600
C7	CAPACITOR, 100 µf ±20%, 20V	EMR*	601
C8	CAPACITOR, 1000 Pf ±1%, 100V	EMR*	600
C9	CAPACITOR, Same as C7		
C10	CAPACITOR, Same as C8		
C11	CAPACITOR, Same as C4		
C12	CAPACITOR, Same as C7		
C13 thru C15	CAPACITOR, 20 µf ±20%, 50V	Midweck	7XF
C16 thru C21	CAPACITOR, 150 µf ±20%, 15V	EMR*	601
CR1	DIODE	EMR*	642
CR2	DIODE	Motorola	1N4743A
CR3	DIODE	Motorola	1N4002
CR4	DIODE	Motorola	1N4001
CR5	DIODE	EMR*	642
CR6	DIODE, Same as CR1		
CR7	DIODE, Same as CR3		
CR8	DIODE, Same as CR5		
CR9 and CR10	DIODE	Motorola	1N936A
CR11	DIODE	EMR*	642
Q1	TRANSISTOR	Motorola	MPS6522/-SPS2940
Q2 and Q3	TRANSISTOR	National Semi.	2N3054
Q4	TRANSISTOR, Same as Q1		
Q5	TRANSISTOR, Same as Q2		
Q7 thru Q13	TRANSISTOR	Motorola	2N3565
Q16 and Q17	TRANSISTOR, Same as Q7		
Q18 and Q19	TRANSISTOR, Same as Q1		
Q20	TRANSISTOR	Motorola	2N3766
Q21	TRANSISTOR	Motorola	2N3740
Q22	TRANSISTOR, Same as Q7		
Q23	TRANSISTOR, Same as Q1		
Q24	TRANSISTOR, Same as Q7		
Q25	TRANSISTOR, Same as Q1		
Q26	TRANSISTOR, Same as Q7		
Q27	TRANSISTOR, Same as Q21		
Q28 and Q29	TRANSISTOR, Same as Q7		
Q30 thru Q33	TRANSISTOR, Same as Q1		
R1	RESISTOR, 2K ±5%, 1/4W	MIL-R-11/8	RC07GF202J
R2	RESISTOR, 8.2K ±5%, 1/4W	MIL-R-11/8	RC07GF822J
R3	RESISTOR, 2.05K ±1%, 1/8W	EMR*	625
R4 and R5	RESISTOR, 12K ±5%, 1/4W	MIL-R-11/8	RC07GF123J
R6	RESISTOR, 2.26K ±1%, 1/8W	EMR*	625
R7	RESISTOR, Same as R4		
R8	RESISTOR, 953Ω ±1%, 1/8W	EMR*	625
R10	RESISTOR, 1.6K ±5%, 1/4W	MIL-R-11/8	RC07GF162J
R14	POTENTIOMETER, 1K ±10%, 1W	Amphenol	2600P-102
R15	RESISTOR, Same as R10		
R16	POTENTIOMETER, 500Ω ±10%, 1W	Amphenol	2600P-501
R17	RESISTOR, 1.3K ±5%, 1/4W	MIL-R-11/8	RC07GF132J

*Correlate coded number in PART NO. column with approved vendor in Table 6-19.

Table 6-16 (Cont'd.). Regulator Printed-Circuit Card, Parts List

CIRCUIT SYMBOL NO.	DESCRIPTION	MANUFACTURER	
		NAME	PART NO.
R18	RESISTOR, 2.49K ±1%, 1/8W	EMR*	625
R19	RESISTOR, Same as R4		
R20	RESISTOR, Same as R16		
R21	RESISTOR, 3K ±3%, 2.5W	EMR*	621
R22	RESISTOR, 150Ω ±5%, 1/4W	MIL-R-11/8	RC07GF151J
R23	RESISTOR, 2.2K ±5%, 1/4W	MIL-R-11/8	RC07GF222J
R24	RESISTOR, 470Ω ±5%, 1/4W	MIL-R-11/8	RC07GF471J
R25	RESISTOR, 3.6K ±5%, 1/4W	MIL-R-11/8	RC07GF362J
R27	RESISTOR, 3.9K ±5%, 1/4W	MIL-R-11/8	RC07GF392J
R28	RESISTOR, 1.47K ±1%, 1/8W	EMR*	625
R29	RESISTOR, 3K ±5%, 1/4W	MIL-R-11/8	RC07GF302J
R30	RESISTOR, 1K ±5%, 1/4W	MIL-R-11/8	RC07GF102J
R31	RESISTOR, 1.54K ±1%, 1/8W	EMR*	625
R32	RESISTOR, Same as R27		
R33	RESISTOR, Same as R31		
R34	RESISTOR, 7.5K ±5%, 1/4W	MIL-R-11/8	RC07GF752J
R38	RESISTOR, Same as R25		
R39	RESISTOR, 6.8K ±5%, 1/4W	MIL-R-11/8	RC07GF682J
R40	RESISTOR, 40Ω ±3%, 2.5W	EMR*	621
R41 and R42	RESISTOR, 15K ±5%, 1/4W	MIL-R-11/8	RC07GF153J
R43	RESISTOR, 6.2K ±5%, 1/4W	MIL-R-11/8	RC07GF622J
R44	RESISTOR, 1.5K ±5%, 1/4W	MIL-R-11/8	RC07GF152J
R45	RESISTOR, Same as R29		
R46	RESISTOR, Same as R1		
R47	RESISTOR, Same as R2		
R48	RESISTOR, Same as R28		
R49 and R50	RESISTOR, Same as R4		
R51	RESISTOR, 1.87K ±1%, 1/8W	EMR*	625
R52	RESISTOR, Same as R14		
R53	RESISTOR, Same as R16		
R54	RESISTOR, Same as R2		
R55	RESISTOR, Same as R39		
R56	RESISTOR, 75Ω ±3%, 2.5W	EMR*	621
R57	RESISTOR, Same as R34		
R58	RESISTOR, 16K ±5%, 1/4W	MIL-R-11/8	RC07GF163J
R59	RESISTOR, 4.3K ±5%, 1/4W	MIL-R-11/8	RC07GF432J
R60	RESISTOR, 20K ±5%, 1/4W	MIL-R-11/8	RC07GF203J
R61	RESISTOR, 10K ±5%, 1/4W	MIL-R-11/8	RC07GF103J
R62	RESISTOR, Same as R39		
R63	RESISTOR, Same as R4		
R64	RESISTOR, Same as R21		
R65	RESISTOR, Same as R22		
R66	RESISTOR, Same as R1		
R67	RESISTOR, Same as R24		
R68	RESISTOR, Same as R25		
R70	RESISTOR, Same as R27		
R71	RESISTOR, Same as R51		

*Correlate coded number in PART NO. column with approved vendor in Table 6-19.

Table 6-17. Rear-Panel Assembly, Parts List (Ref. Figure 3-1)

CIRCUIT SYMBOL NO.	DESCRIPTION	MANUFACTURER	
		NAME	PART NO.
A3	REAR PANEL ASSEMBLY	EMR	6245
F1	FUSE, 5 Amp., 3 AG	Littlefuse	312005
J1 thru J4	CONNECTOR, Type BNC	Automatic Metal Products	UG1094A/U
J5	CONNECTOR, 52 Pin	Amphenol	220-1N-052
J6	CONNECTOR	Hubbell	7486
J7	BINDING POST	Superior	GP30NC
J8	BINDING POST	Superior	DF30BC
S1	SWITCH, Toggle	Torbal	SP-7
XF1	FUSE HOLDER	Littlefuse	342004
B1	BLOWER, Muffin Venturi Version	Rotron	
	CONNECTOR, Type BNC (Mates with J1 through J4)	Automatic Metal Products	UG-260/U
	CONNECTOR (Mates with J5)	Amphenol	220-2N052
	CONNECTOR (Mates with J6)	Hubbell	7484

Table 6-18. Power Supply Assembly, Parts List (Ref. Figure 5-30)

CIRCUIT SYMBOL NO.	DESCRIPTION	MANUFACTURER	
		NAME	PART NO.
A4	POWER SUPPLY ASSEMBLY	EMR	6246
CR1 thru CR3	DIODE (Bridge)	Motorola	MDA952-2
C1	CAPACITOR, 2600 µf ±10%, 50V	Sprague	36D262G0 50AB2A
C2	CAPACITOR, 5500 µf ±10%, 25V	Sprague	36D552G0 25AB2A
C3	CAPACITOR, Same as C1		
Q1	TRANSISTOR	Motorola	2N3791
Q2 thru Q4	TRANSISTOR	Motorola	2N3055
R1 thru R3	RESISTOR, 3.3K ±10%, 1W	MIL-R-11	RC32GF332K
T1	TRANSFORMER	EMR	7635
TB1	COMPONENT MOUNTING BOARD (Ref. Figure 5-31)	EMR	6837
TB1CR1	DIODE	Motorola	1N2982A
TB1CR2 and CR3	DIODE	Motorola	1N4736A
TB1CR4	DIODE, Same as TB1CR1		
TB1Q1	TRANSISTOR	Motorola	2N3766
TB1Q2	TRANSISTOR	Motorola	2N3740
TB1R1 and R2	RESISTOR, 2Ω ±3%, 10W	EMR*	622
TB1R3	RESISTOR, 120Ω ±10%, 2W	MIL-R-11	RC42GF121K
TB1R4	RESISTOR, 1.5K ±10%, 2W	MIL-R-11	RC42GF152K
TB1R5 and R6	RESISTOR, 27Ω ±3%, 2.5W	EMR*	621
TB1R7	RESISTOR, 1.8K ±10%, 2W	MIL-R-11	RC42GF182K

*Correlate coded number in PART NO. column with approved vendor in Table 6-19.

Table 6-19. Approved Vendors List

EMR SOURCE CONTROL NUMBER	VENDOR	TYPE
600	Electro-Motive Mfg. Co.	DM Series
	Arco Electronics	DM Series
601	Kemet Company	J Series
	Sprague Electric Co.	CS13, 150D
	Mallory Capacitor Co.	TAS Series
	U.S. Semcor	TS-1 TS4
619	Alpha Wire Corp	
	Columbia Wire & Supply Co.	
621	Dale Electronics	RS-2C
	Sage Electronics	SA2W
	Ward-Leonard	3SX
	Mepco, Inc.	HT120
623	Dale Electronics	RS-5
	Ohmite	RW67
	Sage Electronics	1550S
624	IRC	EM
	Mepco	FE-10
	Dale	MF-1/10
	Sprague	416E
625	IRC	MEA
	Mepco	FE-12
	Dale Electronics	MF
	Ward-Leonard	WL60
	Electra	MF5
	Sprague	418E
639	Clevite Semiconductor	1N457
	Erie Tech. Prod.	1N457
	Fairchild Semiconductor	1N457
	Hughes Semiconductor	1N457
	Continental Device Corp.	1N457
	Raytheon	1N457
	Sylvania	1N457
	Transitron	1N457
	General Instrument	1N457
642	General Instrument	1N746A through 1N759A
	Hoffman	1N746A through 1N759A
	Motorola	1N746A through 1N759A
	Continental Device	1N746A through 1N759A
	Texas Instrument	1N746A through 1N759A
	Transitron	1N746A through 1N759A
	TRW	1N746A through 1N759A

Table 6-19 (Cont'd.). Approved Vendors List

EMR SOURCE CONTROL NUMBER	VENDOR	TYPE
642 (Cont'd.)	Western	1N746A through 1N759A
	International Rectifier	1N746A through 1N759A
	Hughes	1N746A through 1N759A
648	General Instrument	2N1309
	Texas Instrument	2N1309
	RCA	2N1309
649	General Instrument	2N404
	Texas Instrument	2N404
	RCA	2N404
658	Texas Instrument	2N2412
663	Transitron	SG-22
	Continental Device	CD1117
	Sylvania	DG472
666	General Electric	NPN
	General Instrument	NPN
	National Semiconductor	NPN
	Fairchild	NPN
	Motorola	NPN
671	General Electric	2N708
	General Instrument	2N708
	Texas Instrument	2N708
	RCA	2N708
	Motorola	2N708
	National Semiconductor	2N708
673	Continental Device	1N3064
	General Electric	1N3064
	Raytheon	1N3064
	Sylvania	1N3064
	Texas Instrument	1N3064
	Transitron	1N3064
694	Hughes	2N1131
	Motorola	2N1131
	Fairchild	2N1131
	Transitron	2N1131
	Texas Instrument	2N1131
800	Admiral Plastics	
	Delbert Blinn	
	Milton Ross	
	Thermalloy	
	Perfection Mica	
800-1	Milton Ross	
	Thermalloy	

Table 6-19 (Cont'd.). Approved Vendors List

EMR SOURCE CONTROL NUMBER	VENDOR	TYPE
801	Motorola	2N2501
	General Instrument	2N2501
809	Electro-Motive Mfg. Co.	MPD Series
814	Fairchild	
	Western Semiconductors	
829	Texas Instrument	2N1308
	RCA	2N1308
834	Daystrom	
903	Fairchild	FA2411
905	Electro Cube, Inc.	
910	Continental Device	1N965
	Fairchild	1N965
	Motorola	SZ50548
919	Ledex, Inc.	
920	Ledex, Inc.	

MP MASTER
MA29953